TRACO POWER

Heat Sink

THM-HS1

Order Code	THM-HS1
Compatible with	THM 60WI
Thermal Impedance	Please refer to converter datasheets
Package Content	Heatsink, thermal pad and 2 clamps
Material	AL 6063
Surface Finish	Anodized (black)
Weight	28.26 g (without converter)
RoHS Exemptions	No Exemptions
Overview Link	www.tracopower.com/overview/thm-hs1

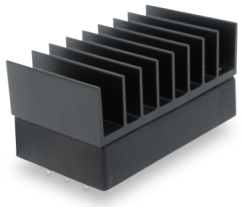

Outline Dimensions

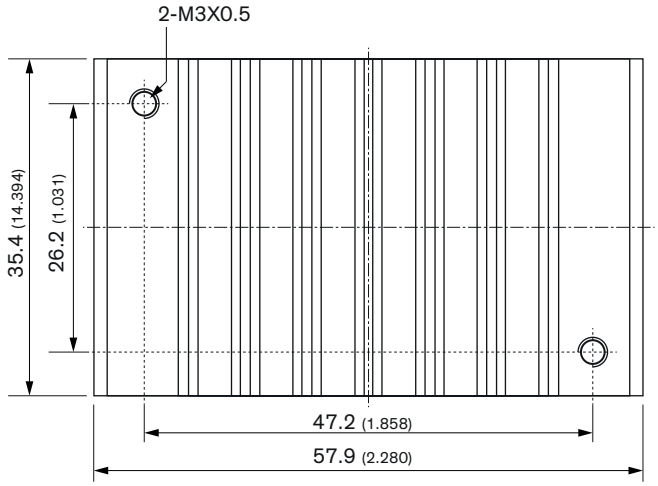

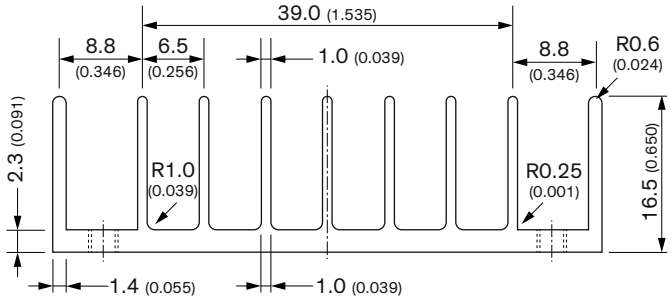

Dimensions in mm (inch)

© Copyright 2025 Traco Electronic AG