ISL International Standards Laboratory Corp. http://www.isl.com.tw

Certificate

Issue Date: December 26, 2022
Ref. Report No. ISL-22LE0999CE35

Product Name	:	THN 20UIR Series with Heatsink
Main Model	:	THN 20-7223UIR-N
Series Model	:	THN 20-3611BUIRyz(a);THN 20-3611UIRyz(a);THN 20-3612UIRyz(a); THN 20-3613UIRyz(a);THN 20-3615UIRyz(a);THN 20-3622UIRyz(a); THN 20-3623UIRyz(a);THN 20-7211BUIRyz(a);THN 20-7211UIRyz(a); THN 20-7212UIRyz(a);THN 20-7213UIRyz(a);THN 20-7215UIRyz(a); THN 20-7222UIRyz(a);THN 20-7223UIRyz(a)
Brand	:	TRACO POWER
Responsible Party	:	TRACO ELECTRONIC AG
Address	:	Sihlbruggstrasse 111, CH-6340 Baar

We, **International Standards Laboratory Corp.**, hereby certify that:

The sample ISL received which bearing the trade name and model specified above has been shown to comply with the applicable technical standards as indicated in the measurement report and was tested in accordance with the measurement procedures specified in European Council Directive EMC Directive 2014/30/EU and UK Directive Electromagnetic Compatibility Regulations 2016. And Our laboratories is the accredited laboratories and are approved according to ISO/IEC 17025. The device was passed the test performed according to :

Standards:

CE

EN 55032:2015+A11:2020 and EN 55032:2015+A1:2020 and CISPR 32:2015+A1:2019 Class B
EN 55035:2017+A11:2020 and CISPR 35:2016 modified
EN 61000-4-2:2009 and IEC 61000-4-2:2008
EN 61000-4-3:2006+A1:2008 +A2:2010 and IEC 61000-4-3:2006+A1:2007+A2:2010
EN 61000-4-4:2012 and IEC 61000-4-4:2012
EN 61000-4-5:2014+A1:2017 and IEC 61000-4-5:2014+A1:2017
EN 61000-4-6:2014+AC:2015 and IEC 61000-4-6:2013
EN 61000-4-8:2010 and IEC 61000-4-8:2009

UK

BS EN 55032:2015+A11:2020 and BS EN 55032:2015+A1:2020 Class B
BS EN 55035: 2017+A11:2020
BS EN 61000-4-2:2009
BS EN 61000-4-3:2006+A2:2010
BS EN 61000-4-4:2012
BS EN 61000-4-5:2014+A1:2017
BS EN 61000-4-6:2014
BS EN 61000-4-8:2010

ACMA

AS/NZS CISPR 32:2015+A1:2020 Class B

I attest to the accuracy of data and all measurements reported herein were performed by me or were made under my supervision and are correct to the best of my knowledge and belief. I assume full responsibility for the completeness of these measurements and vouch for the qualifications of all persons taking them.
The determination of the test results is determined by customer agreement, regulations or standard document specifications.
The Laboratory evaluates measurement inaccuracies based on regulatory or standard document specifications and is listed in the report for reference. The quantitative project part judges the conformity of the test results based on the evaluation results of the standard cited uncertainty, and the qualitative project does not temporarily evaluate the measurement uncertainty.

Angus Chu

Angus Chu / Sr. Manager

International Standards Laboratory Corp. LT Lab.
TEL: +886-3-263-8888 FAX: +886-3-263-8899
No. 120, Lane 180, Hsin Ho Rd., Lung-Tan Dist., Tao Yuan City 325, Taiwan

ISL International Standards Laboratory Corp. http://www.isl.com.tw

TEST REPORT

of

EN 55032 / CISPR 32 / BS EN 55032
AS/NZS CISPR 32 Class B
EN 55035 / CISPR 35 / BS EN 55035 IMMUNITY

Product:	**THN 20UIR Series with Heatsink**
Main Model:	**THN 20-7223UIR-N**
Series Model:	**THN 20-3611BUIRyz(a);THN 20-3611UIRyz(a);** **THN 20-3612UIRyz(a);THN 20-3613UIRyz(a);** **THN 20-3615UIRyz(a);THN 20-3622UIRyz(a);** **THN 20-3623UIRyz(a);THN 20-7211BUIRyz(a);** **THN 20-7211UIRyz(a);THN 20-7212UIRyz(a);** **THN 20-7213UIRyz(a);THN 20-7215UIRyz(a);** **THN 20-7222UIRyz(a);THN 20-7223UIRyz(a)**
Brand:	**TRACO POWER**
Applicant:	**TRACO ELECTRONIC AG**
Address:	**Sihlbruggstrasse 111, CH-6340 Baar**

Test Performed by:

International Standards Laboratory Corp. LT Lab.
TEL: +886-3-263-8888 FAX: +886-3-263-8899
No. 120, Lane 180, Hsin Ho Rd., Lung-Tan Dist., Tao Yuan City 325, Taiwan

Report No.: **ISL-22LE0999CE35**
Issue Date : **December 26, 2022**

Testing Laboratory 0997

Test results given in this report apply only to the specific sample(s) tested and are traceable to national or international standard through calibration of the equipment and evaluating measurement uncertainty herein. The uncertainty of the measurement does not include in consideration of the test result unless the customer required the determination of uncertainty via the agreement, regulation or standard document specification. This test report shall not be reproduced except in full, without the written approval of International Standards Laboratory Corp.

Contents of Report

1. General 1
   1.1 Certification of Accuracy of Test Data 1
   1.2 Test Standards 2
   1.3 Description of EUT 4
   1.4 Description of Support Equipment 7
2. Power Main Port Conducted Emissions 8
   2.1 Test Setup and Procedure 8
   2.2 Conduction Test Data: Configuration 1 10
   2.3 Conduction Test Data: Configuration 2 12
   2.4 Test Setup Photo 14
3. Telecommunication Port Conducted Emissions 16
   3.1 Test Setup and Procedure 16
4. Radiated Disturbance Emissions 18
   4.1 Test Setup and Procedure 18
   4.2 Limit 20
   4.3 Radiation Test Data: Configuration 1 22
   4.4 Radiation Test Data: Configuration 2 24
   4.5 Test Setup Photo 26
5. Voltage Disturbance Emissions at Antenna Terminals 27
   5.1 Test Setup and Procedure 27
6. Differential Voltage Emissions 29
   6.1 Test Setup and Procedure 29
7. Outdoor units of home satellite receiving systems 31
   7.1 Test Setup and Procedure 31
8. Electrostatic discharge (ESD) immunity 33
   8.1 Test Specification and Setup 33
   8.2 Test Data: Configuration 1 34
   8.3 Test Point 35
   8.4 Test Setup Photo 36
9. Radio-Frequency, Electromagnetic Field immunity 37
   9.1 Test Specification and Setup 37
   9.2 Test Data: Configuration 1 38
   9.3 Test Setup Photo 40
10. Electrical Fast transients/burst immunity 41
   10.1 Test Specification and Setup 41
   10.2 Test Data: Configuration 1 43
   10.3 Test Setup Photo 44

11. Surge Immunity 45
11.1 Test Specification and Setup 45
11.2 Test Data: Configuration 1 46
11.3 Test Setup Photo 47
12. Immunity to Conductive Disturbance 48
12.1 Test Specification and Setup 48
12.2 Test Data: Configuration 1 49
12.3 Test Setup Photo 50
13. Power Frequency Magnetic Field immunity 51
13.1 Test Specification and Setup 51
13.2 Test Data: Configuration 1 52
13.3 Test Setup Photo 53
14. Appendix 54
14.1 Appendix A: Test Equipment 54
14.2 Appendix B: Uncertainty of Measurement 57
14.3 Appendix C: Photographs of EUT 58

1. General

1.1 Certification of Accuracy of Test Data

Standards:	Please refer to 1.2
Equipment Tested:	THN 20UIR Series with Heatsink
Main Model:	THN 20-7223UIR-N
Series Model:	THN 20-3611BUIRyz(a);THN 20-3611UIRyz(a); THN 20-3612UIRyz(a);THN 20-3613UIRyz(a); THN 20-3615UIRyz(a);THN 20-3622UIRyz(a); THN 20-3623UIRyz(a);THN 20-7211BUIRyz(a); THN 20-7211UIRyz(a);THN 20-7212UIRyz(a); THN 20-7213UIRyz(a);THN 20-7215UIRyz(a); THN 20-7222UIRyz(a);THN 20-7223UIRyz(a)
Brand:	TRACO POWER
Applicant:	TRACO ELECTRONIC AG
Sample received Date:	August 16, 2022
Final test Date:	EMI: refer to the date of test data EMS: December 22, 2022
Test Site:	Chamber 02; Conduction 03; Immunity 02
Test Distance:	10m (EMI test)
Temperature:	refer to each site test data
Humidity:	refer to each site test data
Atmospheric Pressure:	86 kPa to 106 kPa
Input power:	Conduction input power: DC 36 V; DC 72 V Radiation input power: DC 36 V; DC 72 V Immunity input power: DC 72 V
Test Result:	**PASS**
Report Engineer:	Cheryl Tung
Test Engineer:	Sawyer Chiang
Approved By:	Benson Chen / Manager

1.2 Test Standards

The tests which this report describes were conducted by an independent electromagnetic compatibility consultant, International Standards Laboratory Corp. in accordance with the following

EN 55032:2015+A11:2020 and EN 55032:2015+A1:2020 and CISPR 32:2015+A1:2019 and BS EN 55032:2015+A11:2020 and BS EN 55032:2015+A1:2020 Class B Electromagnetic compatibility of multimedia equipment - Emission requirements.
AS/NZS CISPR 32:2015+A1:2020 Class B Electromagnetic compatibility of multimedia equipment- Emission requirements

Performed Item	Test Performed	Deviation	Result
Conducted emissions from the AC mains power ports	Yes	No	PASS
Telecommunication Port Conducted Emissions (asymmetric mode)	N/A	N/A	N/A
Radiated emissions at frequencies below 1 GHz	Yes	No	PASS
Radiated emissions at frequencies above 1 GHz	N/A	N/A	N/A
Radiated emissions from FM receivers	N/A	N/A	N/A
Voltage Disturbance Emissions at Antenna Terminals	N/A	N/A	N/A
Differential voltage emissions	N/A	N/A	N/A
Outdoor units of home satellite receiving systems	N/A	N/A	N/A

EN 55035:2017+A11:2020 and CISPR 35:2016 modified and BS EN 55035: 2017+A11:2020 Electromagnetic compatibility of multimedia equipment - Immunity requirements.

Standard	Description	Results	Criteria
EN 61000-4-2:2009 IEC 61000-4-2:2008 BS EN 61000-4-2:2009	Electrostatic Discharge	Pass	B
EN 61000-4-3:2006+A1:2008 +A2:2010 IEC 61000-4-3:2006+A1:2007+A2:2010 BS EN 61000-4-3:2006+A2:2010	Radio-Frequency, Electromagnetic Field	Pass	A
EN 61000-4-4:2012 IEC 61000-4-4:2012 BS EN 61000-4-4:2012	Electrical Fast Transient/Burst	Pass	B
EN 61000-4-5:2014+A1:2017 IEC 61000-4-5:2014+A1:2017 BS EN 61000-4-5:2014+A1:2017	Surge	Pass	B
EN 61000-4-6:2014+AC:2015 IEC 61000-4-6:2013 BS EN 61000-4-6:2014	Conductive Disturbance	Pass	A
EN 61000-4-8:2010 IEC 61000-4-8:2009 BS EN 61000-4-8:2010	Power Frequency Magnetic Field	Pass	A

1.2.1 Performance Criteria for Compliance: EN 55035 and BS EN 55035

Performance criterion A
The equipment shall continue to operate as intended without operator intervention. No degradation of performance, loss of function or change of operating state is allowed below a performance level specified by the manufacturer when the equipment is used as intended. The performance level may be replaced by a permissible loss of performance. If the minimum performance level or the permissible performance loss is not specified by the manufacturer, then either of these may be derived from the product description and documentation, and by what the user may reasonably expect from the equipment if used as intended.

Performance criterion B
During the application of the disturbance, degradation of performance is allowed. However, no unintended change of actual operating state or stored data is allowed to persist after the test.

After the test, the equipment shall continue to operate as intended without operator intervention; no degradation of performance or loss of function is allowed, below a performance level specified by the manufacturer, when the equipment is used as intended. The performance level may be replaced by a permissible loss of performance.

If the minimum performance level (or the permissible performance loss), or recovery time, is not specified by the manufacturer, then either of these may be derived from the product description and documentation, and by what the user may reasonably expect from the equipment if used as intended.

Performance criterion C
Loss of function is allowed, provided the function is self-recoverable, or can be restored by the operation of the controls by the user in accordance with the manufacturer's instructions. A reboot or re-start operation is allowed.

Information stored in non-volatile memory, or protected by a battery backup, shall not be lost.

1.3 Description of EUT

EUT

Description	THN 20UIR Series with Heatsink
Condition	Pre-Production
Main Model	THN 20-7223UIR-N
Serial Model	THN 20-3611BUIRyz(a);THN 20-3611UIRyz(a); THN 20-3612UIRyz(a);THN 20-3613UIRyz(a); THN 20-3615UIRyz(a);THN 20-3622UIRyz(a); THN 20-3623UIRyz(a);THN 20-7211BUIRyz(a); THN 20-7211UIRyz(a);THN 20-7212UIRyz(a); THN 20-7213UIRyz(a);THN 20-7215UIRyz(a); THN 20-7222UIRyz(a);THN 20-7223UIRyz(a)
Brand	TRACO POWER
Serial Number	N/A
Highest working frequency	Less than 108MHz
The radiation test should be tested till	1GHz

For EMI test configurations:

Configuration	Model Name	Input VDC	Output Voltage VDC
1	THN 20-3623UIR-N	36	±15
2	THN 20-7223UIR-N	72	±15

For EMS (Not Include Electrical Fast transients/burst immunity & Surge Immunity) test mode

Configuration	Model Name	Input VDC	Output Voltage VDC	With an aluminum electrolytic capacitor test board
1	THN 20-7223UIR-N	72	±15	No

For Electrical Fast transients/burst immunity & Surge Immunity test mode

Configuration	Model Name	Input VDC	Output Voltage VDC	With an aluminum electrolytic capacitor test board
1	THN 20-7223UIR-N	72	±15	Yes

Different Model list:

Model Name	Input Range (VDC)	Output Voltage (VDC)
THN 20-3611BUIRyz(a)	9 ~ 75	5
THN 20-3611UIRyz(a)	9 ~ 75	5.1
THN 20-3612UIRyz(a)	9 ~ 75	12
THN 20-3613UIRyz(a)	9 ~ 75	15
THN 20-3615UIRyz(a)	9 ~ 75	24
THN 20-3622UIRyz(a)	9 ~ 75	±12
THN 20-3623UIRyz(a)	9 ~ 75	±15
THN 20-7211BUIRyz(a)	14 ~ 160	5
THN 20-7211UIRyz(a)	14 ~ 160	5.1
THN 20-7212UIRyz(a)	14 ~ 160	12
THN 20-7213UIRyz(a)	14 ~ 160	15
THN 20-7215UIRyz(a)	14 ~ 160	24
THN 20-7222UIRyz(a)	14 ~ 160	±12
THN 20-7223UIRyz(a)	14 ~ 160	±15

"y" can be -N or blank;
When y= -N represents Negative logic.
When y= blank represents Positive logic.

"z" can be blank;
When z= blank represents with Heatsink.

"(a)" can be 6 variables, each variable may be any
alphanumeric, “- ”, any punctuation mark or blank for marketing purpose and no impact to safety.

EMI Noise Source:
For EMI test requirements/Class B

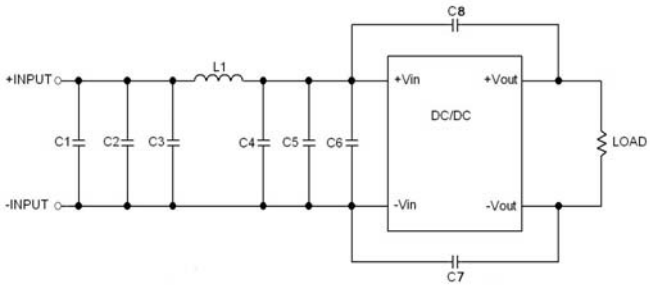

Single Output

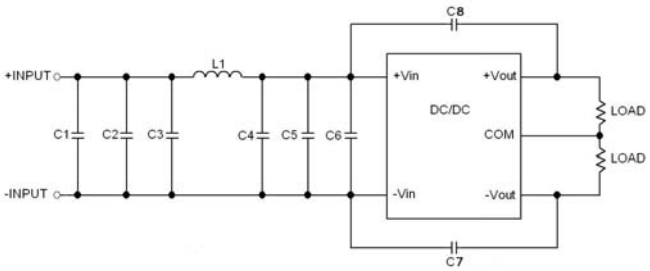

Dual Output

MODEL	C1	C2,C3	C4,C5	C6	C7,C8	L1
THN 20UIR-36Vin	100µF/100V Al Cap.	N/A	N/A	100µF/100V Al Cap.	1000pF/3kV 1808 MLCC	15µH 3.0A
THN 20UIR -72Vin	47µF/200V Al Cap.	N/A	N/A	68µF/200V Al Cap.	1000pF/3kV 1808 MLCC	82µH 1.2A

For Electrical Fast transient & Surge Immunity test requirements

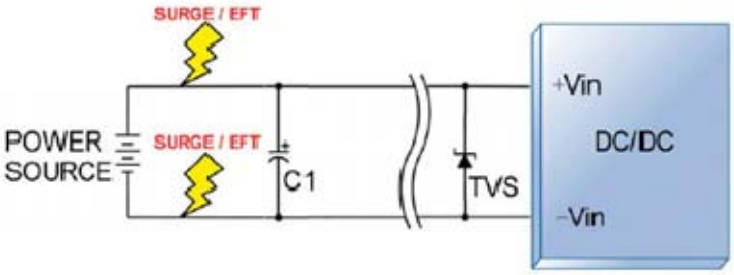

MODEL	C1	TVS
THN 20UIR-36Vin	220µF/100V Al Cap.	120V, 3000W
THN 20UIR-72Vin	150µF/200V Al Cap.	220V, 600W

1.4 Description of Support Equipment

For EMI test Configuration Support unit: 1~2
For EMS test Configuration Support unit: 1~3

No	Unit	Model Serial No.	Brand	Power Cord	FCC ID
1	DC Power Source	GPD-4050D S/N: N/A	GW INSTEK	Non-shielded	FCC DOC
2	Dummy Load	N/A S/N: N/A	N/A	N/A	N/A
3	DC Voltage meter	BN-670 S/N: N/A	Bonny	N/A	N/A

2. Power Main Port Conducted Emissions

2.1 Test Setup and Procedure

2.1.1 Test Setup

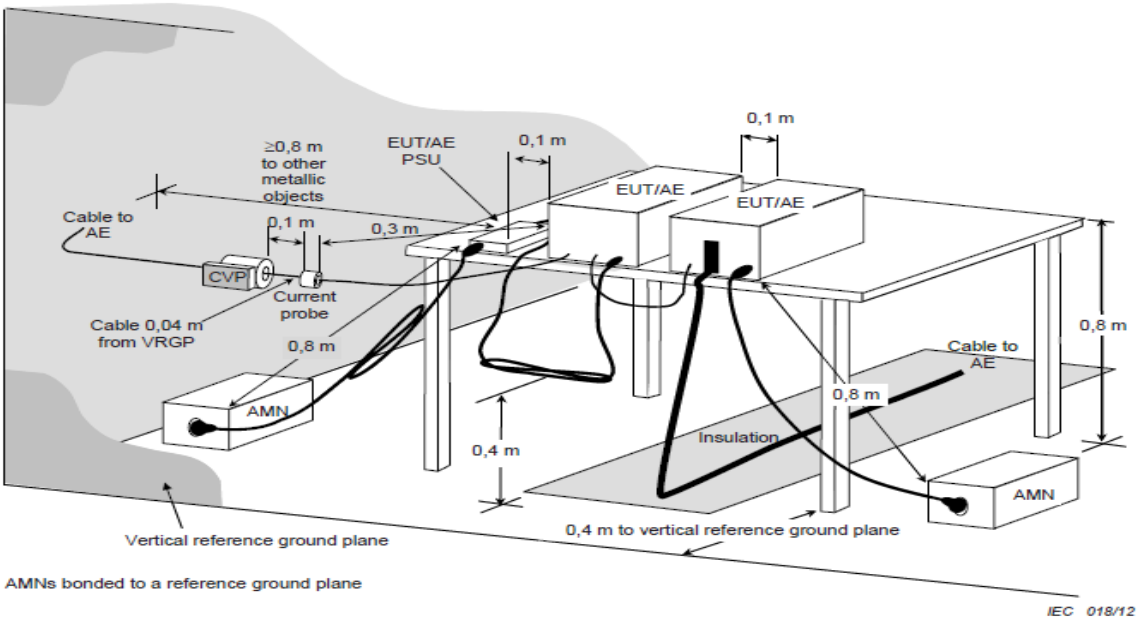

2.1.2 Test Procedure

The measurements are performed in a shielded room test site. The EUT was placed on non-conduction 1.0m x 1.5m table, which is 0.8 meters above an earth-grounded.

Power to the EUT was provided through the AMN which has the Impedance (50ohm/50uH) vs. Frequency Characteristic in accordance with the standard. Power to the AMNs were filtered to eliminate ambient signal interference and these filters were bonded to the ground plane. Peripheral equipment required to provide a functional system (support equipment) for EUT testing was powered from the second AMN through a ganged, metal power outlet box which is bonded to the ground plane at the AMN.

The interconnecting cables were arranged and moved to get the maximum measurement. Both the line of power cord, live and neutral, were measured. All of the interface cables were manipulated according to EN 55032 / BS EN 55032 requirements.

The highest emissions were analyzed in details by operating the spectrum analyzer in fixed tuned mode to determine the nature of the emissions and to provide information which could be useful in reducing their amplitude.

2.1.3 EMI Receiver/Spectrum Analyzer Configuration (for the frequencies tested)

Frequency Range:	150kHz--30MHz
Detector Function:	Quasi-Peak / Average Mode
Resolution Bandwidth:	9kHz

2.1.4 Limit

Conducted emissions from the AC mains power ports of Class_A equipment:

Frequency	QP	AV
MHz	dB(μV)	dB(μV)
0.15-0.50	79	66
0.50-30	73	60
Note: The lower limit shall apply at the transition frequencies		

Conducted emissions from the AC mains power ports of Class_B equipment:

Frequency	QP	AV
MHz	dB(μV)	dB(μV)
0.15-0.50	66-56	56-46
0.50-5.0	56	46
5.0-30	60	50
Note: The lower limit shall apply at the transition frequencies		

Note: The customer requested test “Conducted Emissions”

2.2 Conduction Test Data: Configuration 1

-Live

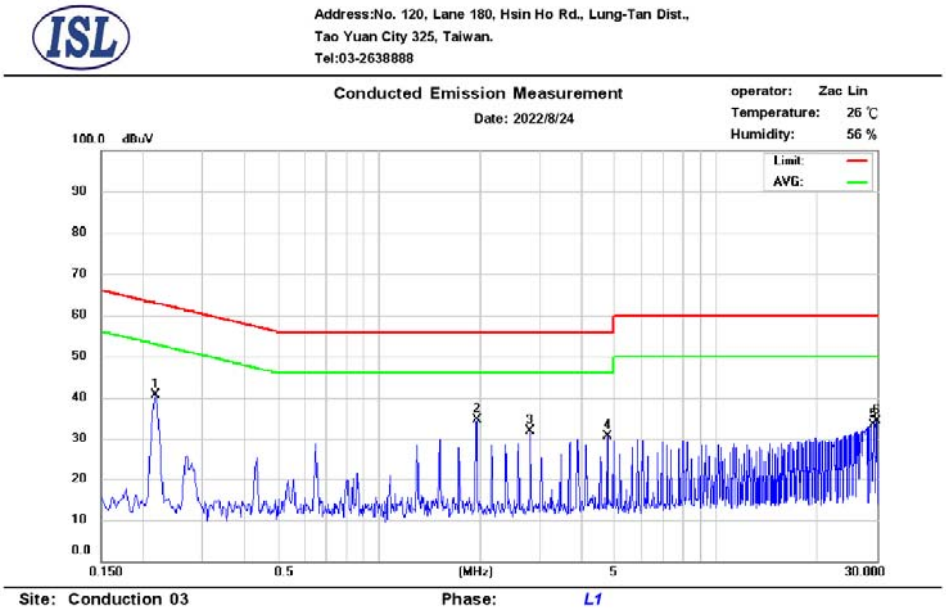

No.	Frequency (MHz)	QP_R (dBuV)	AVG_R (dBuV)	Correct Factor (dB)	QP Emission (dBuV)	QP Limit (dBuV)	QP Margin (dB)	AVG Emission (dBuV)	AVG Limit (dBuV)	AVG Margin (dB)
1	0.218	29.60	29.88	9.78	39.38	62.89	-23.51	39.66	52.89	-13.23
2	1.950	23.17	23.39	9.85	33.02	56.00	-22.98	33.24	46.00	-12.76
3	2.814	21.16	21.25	9.87	31.03	56.00	-24.97	31.12	46.00	-14.88
4	4.762	19.87	19.90	9.91	29.78	56.00	-26.22	29.81	46.00	-16.19
5	29.010	3.43	-1.35	10.20	13.63	60.00	-46.37	8.85	50.00	-41.15
6	29.874	5.19	0.53	10.20	15.39	60.00	-44.61	10.73	50.00	-39.27

Note:
Margin = QP/AVG Emission - Limit
QP/AVG Emission = QP_R/AVG_R + Correct Factor
Correct Factor = LISN Loss + Cable Loss
A margin of -8dB means that the emission is 8dB below the limit
The frequency spectrum graph is for final peak graph, and the attached table is for QP/AVG test result.
If peak data can pass, it will be shown in “QP/AVG Correct” column, if not, QP/AVG data will instead.

- Neutral

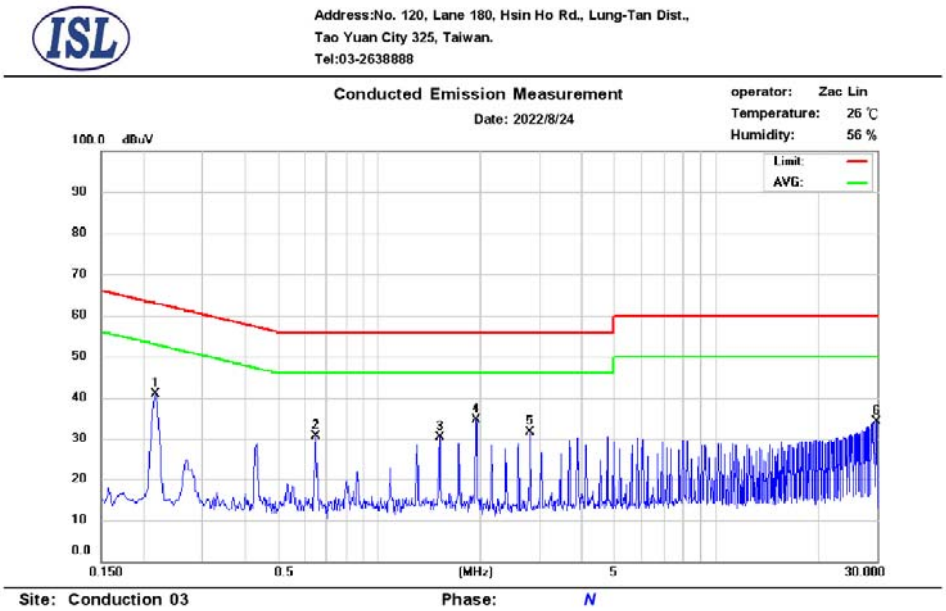

No.	Frequency (MHz)	QP_R (dBuV)	AVG_R (dBuV)	Correct Factor (dB)	QP Emission (dBuV)	QP Limit (dBuV)	QP Margin (dB)	AVG Emission (dBuV)	AVG Limit (dBuV)	AVG Margin (dB)
1	0.218	29.83	30.11	9.79	39.62	62.89	-23.27	39.90	52.89	-12.99
2	0.650	19.00	19.15	9.79	28.79	56.00	-27.21	28.94	46.00	-17.06
3	1.514	19.30	19.46	9.85	29.15	56.00	-26.85	29.31	46.00	-16.69
4	1.946	24.19	24.46	9.86	34.05	56.00	-21.95	34.32	46.00	-11.68
5	2.814	20.56	20.64	9.88	30.44	56.00	-25.56	30.52	46.00	-15.48
6	29.858	22.52	21.22	10.18	32.70	60.00	-27.30	31.40	50.00	-18.60

Note:
Margin = QP/AVG Emission - Limit
QP/AVG Emission = QP_R/AVG_R + Correct Factor
Correct Factor = LISN Loss + Cable Loss
A margin of -8dB means that the emission is 8dB below the limit
The frequency spectrum graph is for final peak graph, and the attached table is for QP/AVG test result.
If peak data can pass, it will be shown in “QP/AVG Correct” column, if not, QP/AVG data will instead.

2.3 Conduction Test Data: Configuration 2

-Live

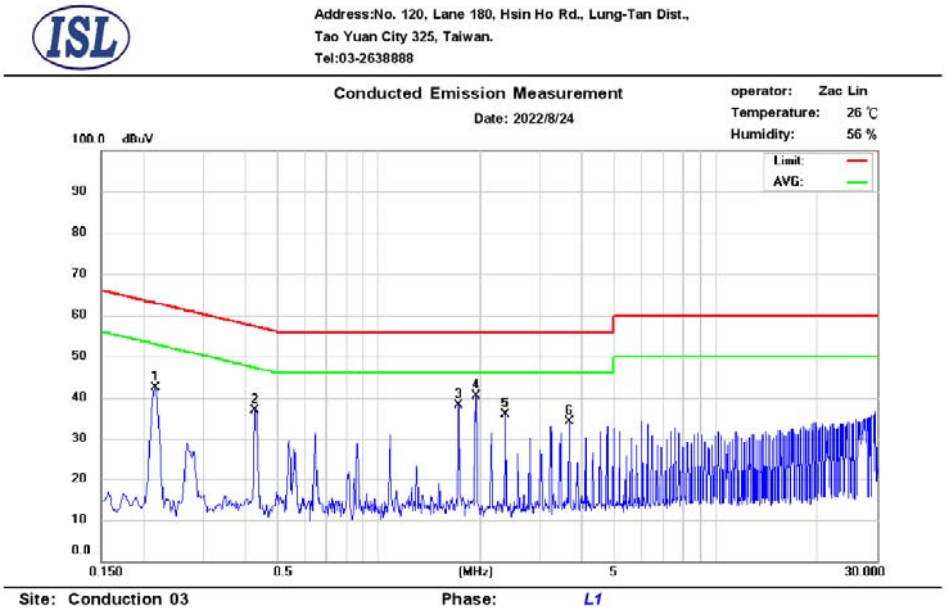

No.	Frequency (MHz)	QP_R (dBuV)	AVG_R (dBuV)	Correct Factor (dB)	QP Emission (dBuV)	QP Limit (dBuV)	QP Margin (dB)	AVG Emission (dBuV)	AVG Limit (dBuV)	AVG Margin (dB)
1	0.218	31.22	31.52	9.78	41.00	62.89	-21.89	41.30	52.89	-11.59
2	0.430	26.23	26.52	9.78	36.01	57.25	-21.24	36.30	47.25	-10.95
3	1.726	27.70	28.00	9.83	37.53	56.00	-18.47	37.83	46.00	-8.17
4	1.942	29.91	30.20	9.85	39.76	56.00	-16.24	40.05	46.00	-5.95
5	2.374	25.30	25.50	9.87	35.17	56.00	-20.83	35.37	46.00	-10.63
6	3.670	24.04	24.21	9.90	33.94	56.00	-22.06	34.11	46.00	-11.89

Note:
Margin = QP/AVG Emission - Limit
QP/AVG Emission = QP_R/AVG_R + Correct Factor
Correct Factor = LISN Loss + Cable Loss
A margin of -8dB means that the emission is 8dB below the limit
The frequency spectrum graph is for final peak graph, and the attached table is for QP/AVG test result.
If peak data can pass, it will be shown in “QP/AVG Correct” column, if not, QP/AVG data will instead.

- Neutral

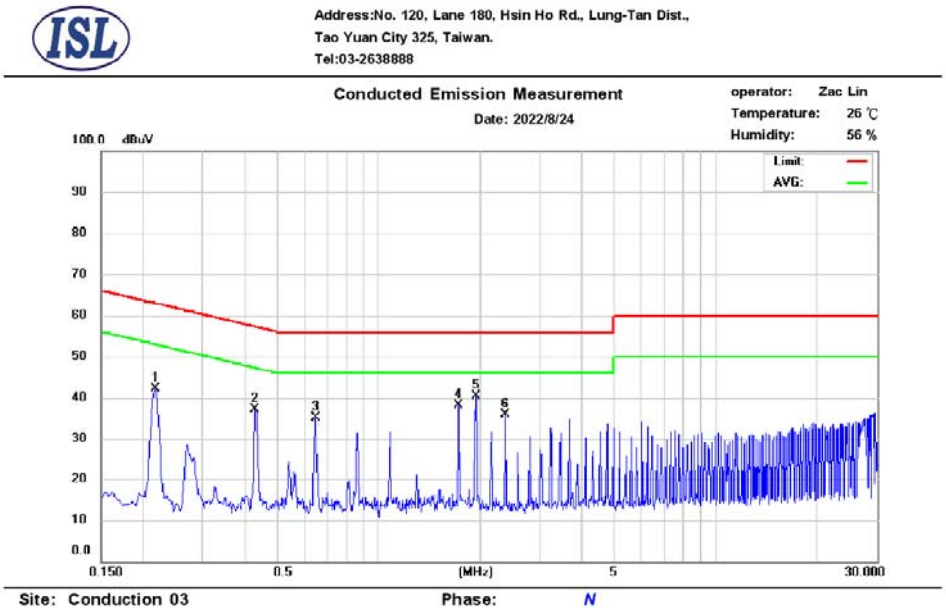

No.	Frequency (MHz)	QP_R (dBuV)	AVG_R (dBuV)	Correct Factor (dB)	QP Emission (dBuV)	QP Limit (dBuV)	QP Margin (dB)	AVG Emission (dBuV)	AVG Limit (dBuV)	AVG Margin (dB)
1	0.218	31.01	31.30	9.79	40.80	62.89	-22.09	41.09	52.89	-11.80
2	0.430	26.39	26.67	9.79	36.18	57.25	-21.07	36.46	47.25	-10.79
3	0.650	23.69	23.97	9.79	33.48	56.00	-22.52	33.76	46.00	-12.24
4	1.726	27.77	28.06	9.84	37.61	56.00	-18.39	37.90	46.00	-8.10
5	1.942	30.06	30.35	9.86	39.92	56.00	-16.08	40.21	46.00	-5.79
6	2.374	25.34	25.53	9.88	35.22	56.00	-20.78	35.41	46.00	-10.59

Note:
Margin = QP/AVG Emission - Limit
QP/AVG Emission = QP_R/AVG_R + Correct Factor
Correct Factor = LISN Loss + Cable Loss
A margin of -8dB means that the emission is 8dB below the limit
The frequency spectrum graph is for final peak graph, and the attached table is for QP/AVG test result.
If peak data can pass, it will be shown in “QP/AVG Correct” column, if not, QP/AVG data will instead.

2.4 Test Setup Photo

Front View

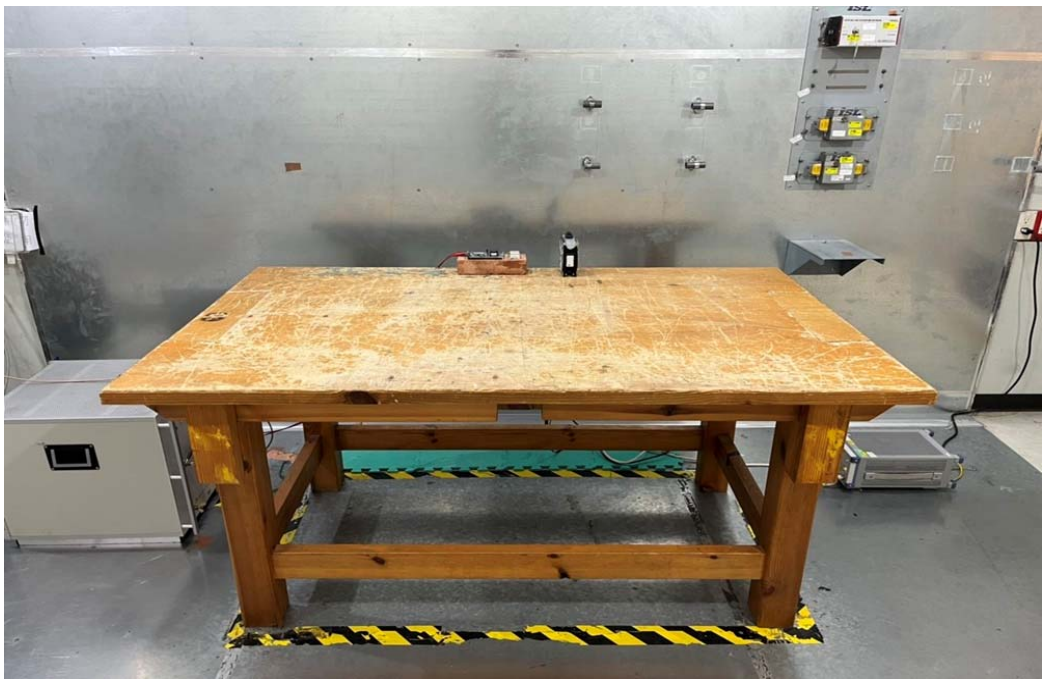

Back View

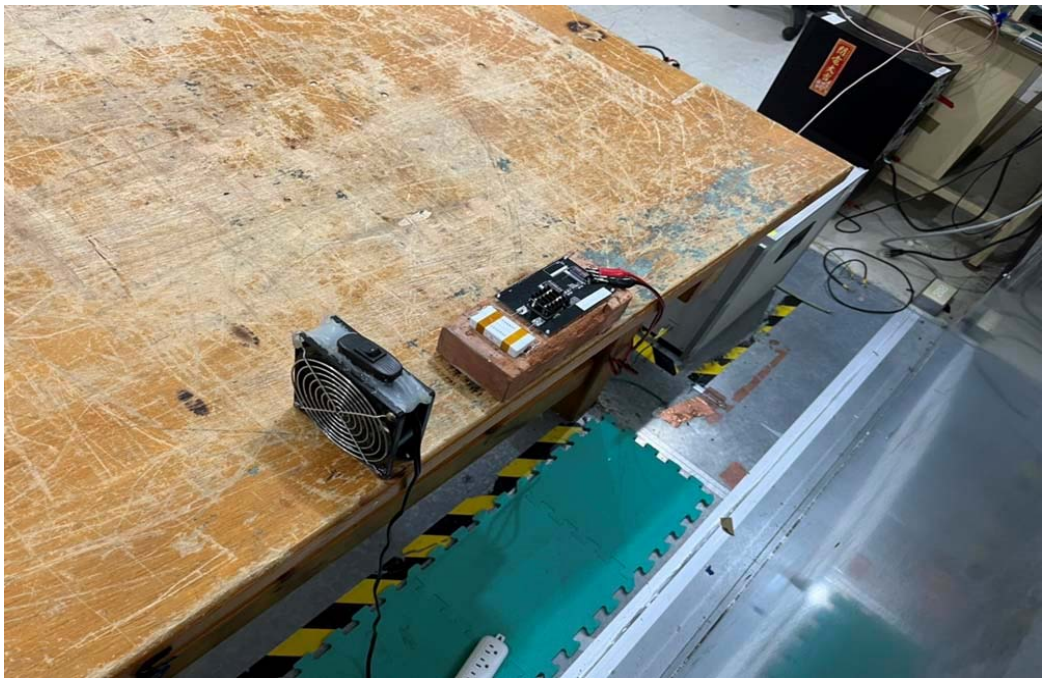

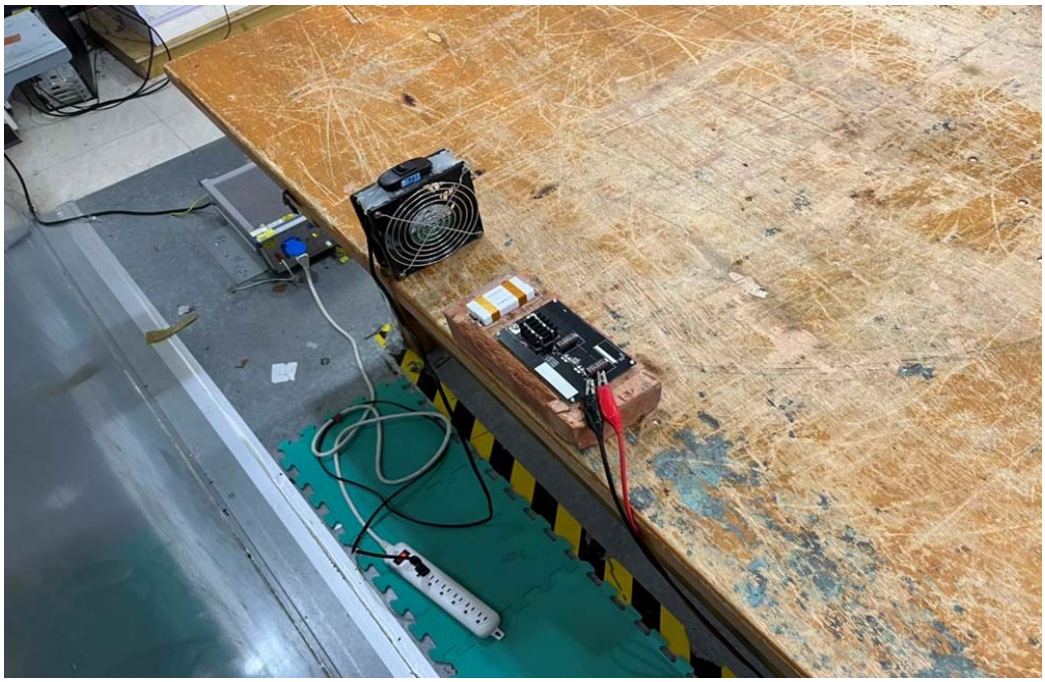

3. Telecommunication Port Conducted Emissions

3.1 Test Setup and Procedure

3.1.1 Test Setup

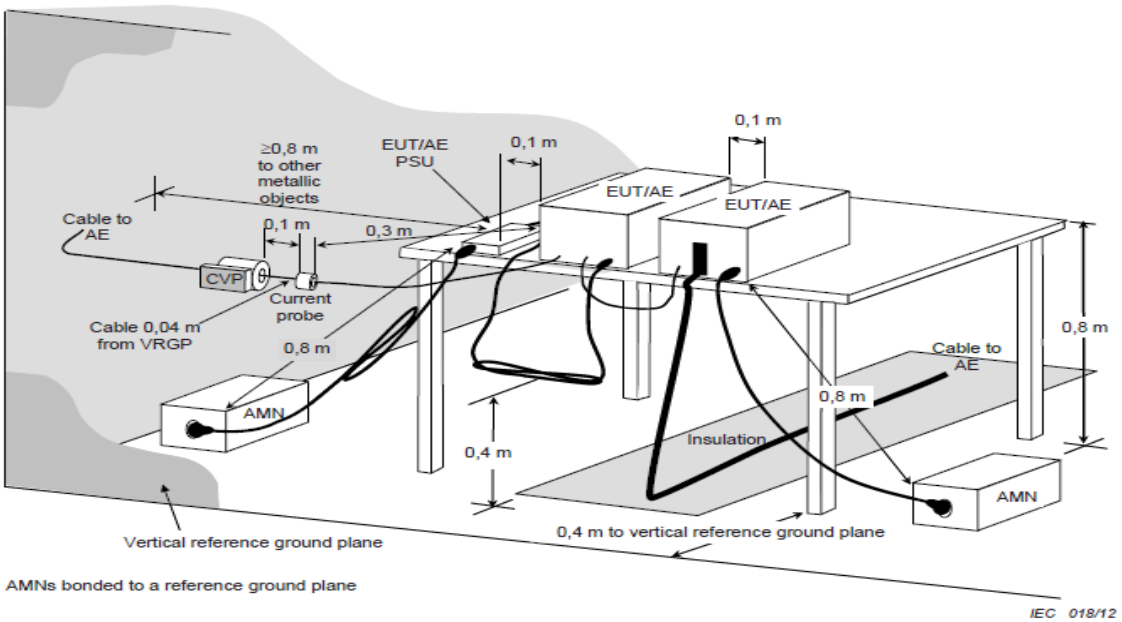

3.1.2 Test Procedure

The measurements are performed in a shielded room test site. The EUT was placed on non-conduction 1.0m x 1.5m table, which is 0.8 meters above an earth-grounded.

The EUT, any support equipment, and any interconnecting cables were arranged and moved to get the maximum measurement. All of the interface cables were manipulated according to EN 55032 / BS EN 55032 requirements.

The port of the EUT was connected to the support equipment through the AAN and linked in normal condition.

AC input power for the EUT & the support equipment power outlets were obtained from the same filtered source that provided input power to the AMN.

The highest emissions were analyzed in details by operating the spectrum analyzer in fixed tuned mode to determine the nature of the emissions and to provide information could be useful in reducing their amplitude.

3.1.3 EMI Receiver/Spectrum Analyzer Configuration (for the frequencies tested)

Frequency Range:	150kHz--30MHz
Detector Function:	Quasi-Peak / Average Mode
Resolution Bandwidth:	9kHz

3.1.4 Limit

Asymmetric mode conducted emissions from Class_A equipment:
Applicable to
1. wired network ports.
2. optical fiber ports with metallic shield or tension members.
3. antenna ports.

Frequency range MHz	Coupling device	Detector type / bandwidth	Class_A voltage limits dB(μV)	Class_A current limits dB(μA)
0.15-0.5	AAN	Quasi Peak / 9 kHz	97-87	n/a
0.5-30			87	
0.15-0.5	AAN	Average / 9 kHz	84-74	
0.5-30			74	
0.15-0.5	CVP and current probe	Quasi Peak / 9 kHz	97-87	53-43
0.5-30			87	43
0.15-0.5	CVP and current probe	Average / 9 kHz	84-74	40-30
0.5-30			74	30
0.15-0.5	Current Probe	Quasi Peak / 9 kHz	n/a	53-43
0.5-30				43
0.15-0.5	Current Probe	Average / 9 kHz		40-30
0.5-30				30

Asymmetric mode conducted emissions from Class_B equipment:
Applicable to:
1. wired network ports.
2. optical fiber ports with metallic shield or tension members.
3. broadcast receiver tuner ports.
4. antenna ports.

Frequency range MHz	Coupling device	Detector type / bandwidth	Class_B voltage limits dB(μV)	Class_B current limits dB(μA)
0.15-0.5	AAN	Quasi Peak / 9 kHz	84-74	n/a
0.5-30			74	
0.15-0.5	AAN	Average / 9 kHz	74-64	
0.5-30			64	
0.15-0.5	CVP and current probe	Quasi Peak / 9 kHz	84-74	40-30
0.5-30			74	30
0.15-0.5	CVP and current probe	Average / 9 kHz	74-64	30-20
0.5-30			64	20
0.15-0.5	Current Probe	Quasi Peak / 9 kHz	n/a	40-30
0.5-30				30
0.15-0.5	Current Probe	Average / 9 kHz		30-20
0.5-30				20

****Remarks: It is not necessary to be tested on this item.**

4. Radiated Disturbance Emissions

4.1 Test Setup and Procedure

4.1.1 Test Setup

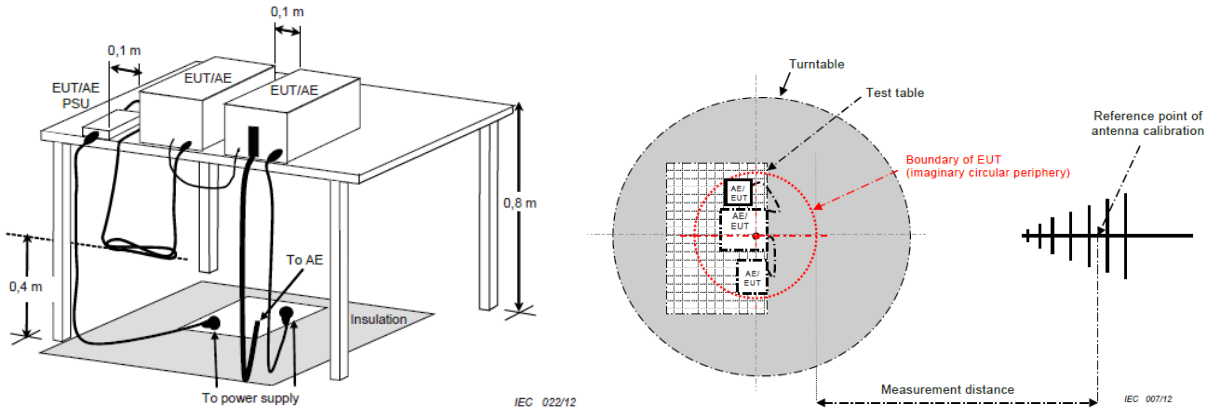

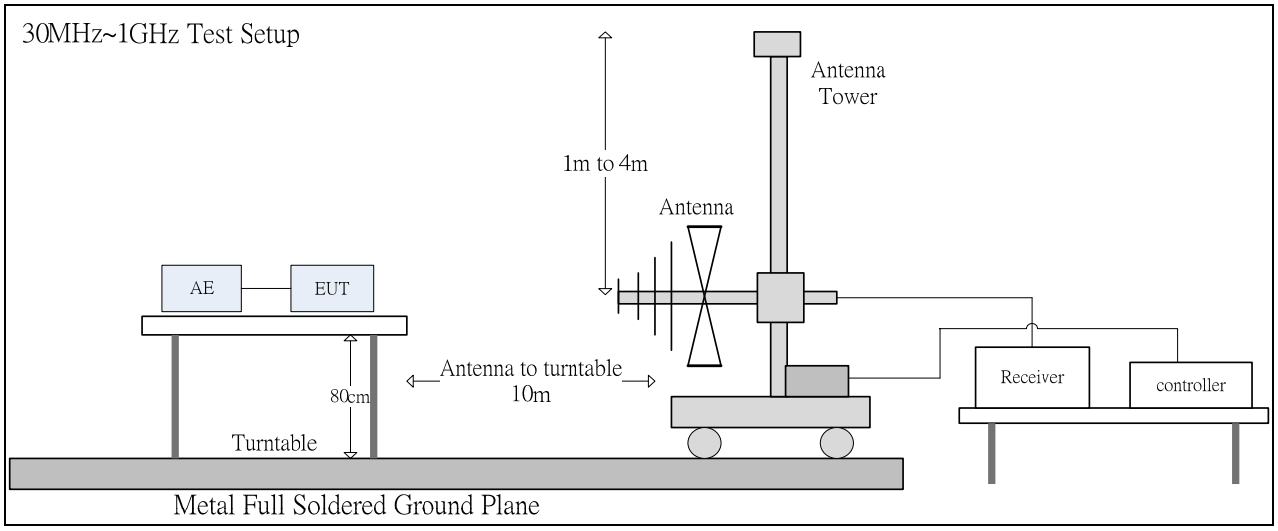

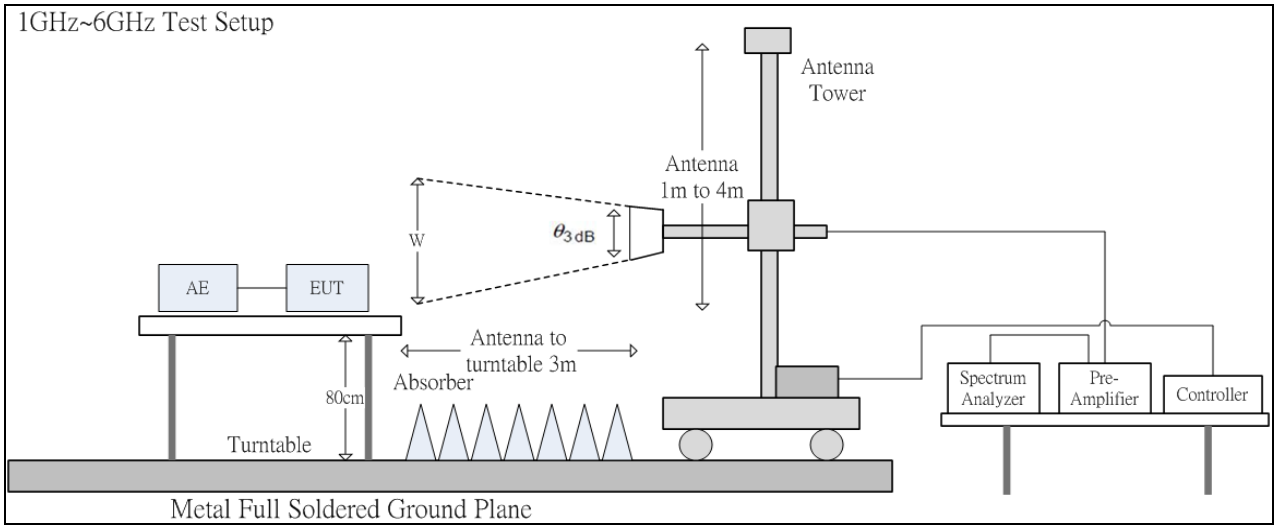

The 3dB beam width of the horn antenna used for the test is as shown in the table below.

Frequency (GHz)	E-plane	H-plane	θ_{3dB} (min)	d= 3 m
				w (m)
1	88°	147°	88°	5.79
2	68°	119°	68°	4.04
3	73°	92°	73°	4.44
4	70°	89°	70°	4.20
5	55°	60°	55°	3.12
6	63°	62°	62°	3.60

4.1.2 Test Procedure

The radiated emissions test will then be repeated on the chamber to measure the amplitudes accurately and without the multiple reflections existing in the shielded room. The EUT and support equipment are set up on the turntable of one of 10 meter chamber. Desktop EUT are set up on a FRP stand 0.8 meter above the ground or floor-standing arrangement shall be placed on the horizontal ground reference plane.

For the initial measurements, the receiving antenna is varied from 1-4 meter height and is changed in the vertical plane from vertical to horizontal polarization at each frequency. The highest emissions between 30 MHz to 1000 MHz were analyzed in details by operating the spectrum analyzer and/or EMI receiver in quasi-peak mode to determine the precise amplitude of the emissions. The highest emissions between 1 GHz to 6 GHz were analyzed in details by operating the spectrum analyzer in peak and average mode to determine the precise amplitude of the emissions. The test volume for a height of up to 30 cm may be obstructed by absorber placed on the ground plane.

At the highest amplitudes observed, the EUT is rotated in the horizontal plane while changing the antenna polarization in the vertical plane to maximize the reading. The interconnecting cables were arranged and moved to get the maximum measurement. Once the maximum reading is obtained, the antenna elevation and polarization will be varied between specified limits to maximize the readings. All of the interface cables were manipulated according to EN 55032 / BS EN 55032 requirements.

The highest internal source of an EUT is defined as the highest frequency generated or used within the EUT or on which the EUT operates or tunes.

If the highest frequency of the internal sources of the EUT is less than 108 MHz, the measurement shall only be made up to 1 GHz.

If the highest frequency of the internal sources of the EUT is between 108 MHz and 500 MHz, the measurement shall only be made up to 2 GHz.

If the highest frequency of the internal sources of the EUT is between 500 MHz and 1 GHz, the measurement shall only be made up to 5 GHz.

If the highest frequency of the internal sources of the EUT is above 1 GHz, the measurement shall be made up to 5 times the highest frequency or 6 GHz, whichever is less.

4.1.3 Spectrum Analyzer Configuration (for the frequencies tested)

Frequency Range: 30MHz--1000MHz
Detector Function: Quasi-Peak Mode
Resolution Bandwidth: 120kHz

Frequency Range: Above 1 GHz to 6 GHz
Detector Function: Peak/Average Mode
Resolution Bandwidth: 1MHz

4.2 Limit

Radiated emissions at frequencies up to 1 GHz for Class_A equipment:

Frequency range MHz	Measurement		Class_A limits dB(μV/m)
	Distance m	Detector type / bandwidth	OATS/SAC
30-230	10	Quasi Peak / 120 kHz	40
230-1000			47
30-230	3		50
230-1000			57

Radiated emissions at frequencies above 1 GHz for Class_A equipment of the EN 55032:2015+A11:2020:

Frequency range MHz	Measurement		Class_A limits dB(μV/m)
	Distance m	Detector type / bandwidth	FSOATS
1000-3000	3	Average / 1MHz	56
3000-6000			60
1000-3000		Peak / 1MHz	76
3000-6000			80

Radiated emissions at frequencies above 1 GHz for Class_A equipment of the EN 55032:2015+A1:2020:

Frequency range MHz	Measurement		Class_A limits dB(μV/m)
	Distance m	Detector type / bandwidth	FSOATS
1000-6000	3	Average / 1MHz	60
1000-6000		Peak / 1MHz	80

Note 1: The radiated emissions at frequencies above 1 GHz test limit in this report is based on EN 55032:2015+A11:2020.

Note 2: Test data in this report has been taken against the EN 55032:2015+A11:2020 limit as it is the most stringent limit. By complying with the more restrictive EN 55032:2015+A11:2020 limit compliance with the EN 55032:2015+A1:2020 limit is also demonstrated.

Radiated emissions at frequencies up to 1 GHz for Class_B equipment:

Frequency range MHz	Measurement		Class_B limits dB(μV/m)
	Distance m	Detector type / bandwidth	OATS/SAC
30-230	10	Quasi Peak / 120 kHz	30
230-1000			37
30-230	3		40
230-1000			47

Radiated emissions at frequencies above 1 GHz for Class_B equipment of the EN 55032:2015+A11:2020:

Frequency range MHz	Measurement		Class_B limits dB(μV/m)
	Distance m	Detector type / bandwidth	FSOATS
1000-3000	3	Average / 1MHz	50
3000-6000			54
1000-3000		Peak / 1MHz	70
3000-6000			74

Radiated emissions at frequencies above 1 GHz for Class_B equipment of the EN 55032:2015+A1:2020:

Frequency range MHz	Measurement		Class_B limits dB(μV/m)
	Distance m	Detector type / bandwidth	FSOATS
1000-6000	3	Average / 1MHz	54
1000-6000		Peak / 1MHz	74

Note 1:The radiated emissions at frequencies above 1 GHz test limit in this report is based on EN 55032:2015+A11:2020.

Note 2:Test data in this report has been taken against the EN 55032:2015+A11:2020 limit as it is the most stringent limit. By complying with the more restrictive EN 55032:2015+A11:2020 limit compliance with the EN 55032:2015+A1:2020 limit is also demonstrated.

Radiated emissions from FM receivers:

Frequency range MHz	Measurement		Class_B limits dB(μV/m)	
	Distance m	Detector type / bandwidth	Fundamental	Harmonics
			OATS/SAC	OATS/SAC
30-230	10	Quasi Peak / 120 kHz	50	42
230-300				42
300-1000				46
30-230	3		60	52
230-300				52
300-1000				56

4.3 Radiation Test Data: Configuration 1
- Radiated Emissions (Horizontal)

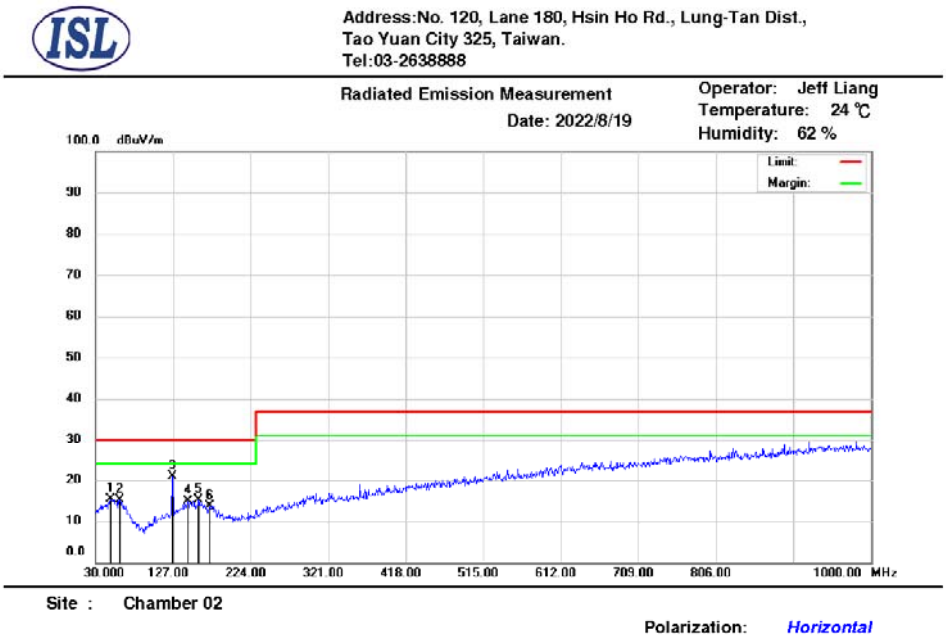

Mk.	Frequency (MHz)	RX_R (dBuV)	Correct Factor(dB/m)	Emission (dBuV/m)	Limit (dBuV/m)	Margin (dB)	Ant.Pos (cm)	Tab.Pos (deg.)	Detector
1	48.43	32.08	-16.59	15.49	30.00	-14.51	317	240	peak
2	60.07	31.83	-16.79	15.04	30.00	-14.96	100	358	peak
3	126.03	38.70	-17.82	20.88	30.00	-9.12	100	106	peak
4	145.43	30.68	-15.86	14.82	30.00	-15.18	241	292	peak
5	159.01	30.46	-15.38	15.08	30.00	-14.92	100	176	peak
6	172.59	29.82	-16.08	13.74	30.00	-16.26	241	359	peak

* Note:
Margin = Emission – Limit
Emission = Radiated Amplitude + Correct Factor
Correct Factor = Antenna Correction Factor + Cable Loss – Pre-Amplifier Gain
A margin of -8dB means that the emission is 8dB below the limit
Antenna Distance: 10 meters
If the peak measured value meets the QP limit, The QP value is inherently compliant.

- Radiated Emissions (Vertical)

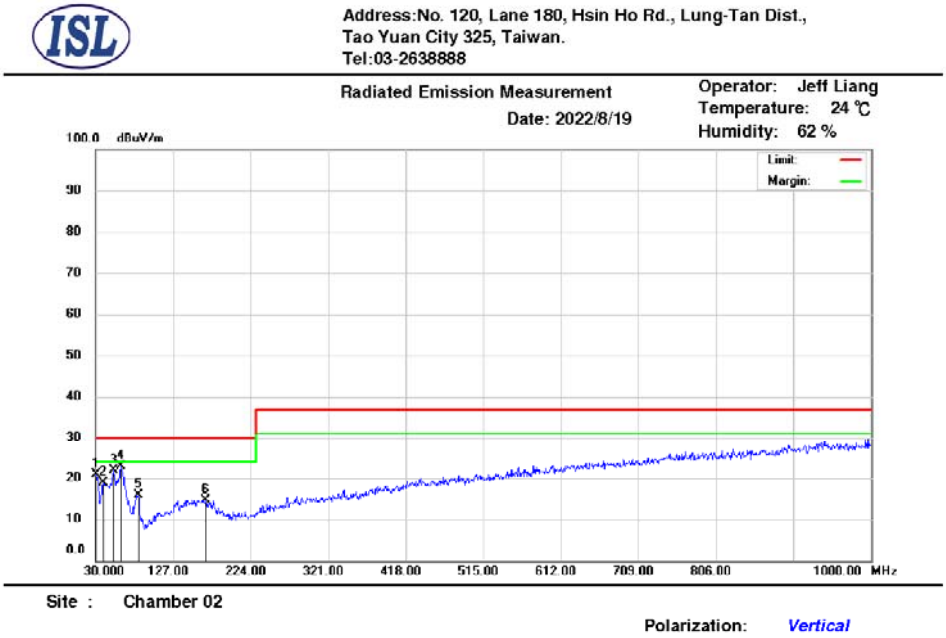

Mk.	Frequency (MHz)	RX_R (dBuV)	Correct Factor(dB/m)	Emission (dBuV/m)	Limit (dBuV/m)	Margin (dB)	Ant.Pos (cm)	Tab.Pos (deg.)	Detector
1	30.97	39.91	-18.97	20.94	30.00	-9.06	400	88	peak
2	39.70	36.24	-17.44	18.80	30.00	-11.20	191	360	peak
3	52.31	38.42	-16.60	21.82	30.00	-8.18	100	316	peak
4	61.04	40.14	-17.24	22.90	30.00	-7.10	100	326	peak
5	83.35	37.76	-21.87	15.89	30.00	-14.11	173	326	peak
6	167.74	30.41	-15.66	14.75	30.00	-15.25	100	85	peak

* Note:
Margin = Emission – Limit
Emission = Radiated Amplitude + Correct Factor
Correct Factor = Antenna Correction Factor + Cable Loss – Pre-Amplifier Gain
A margin of -8dB means that the emission is 8dB below the limit
Antenna Distance: 10 meters
If the peak measured value meets the QP limit, The QP value is inherently compliant.

4.4 Radiation Test Data: Configuration 2
- Radiated Emissions (Horizontal)

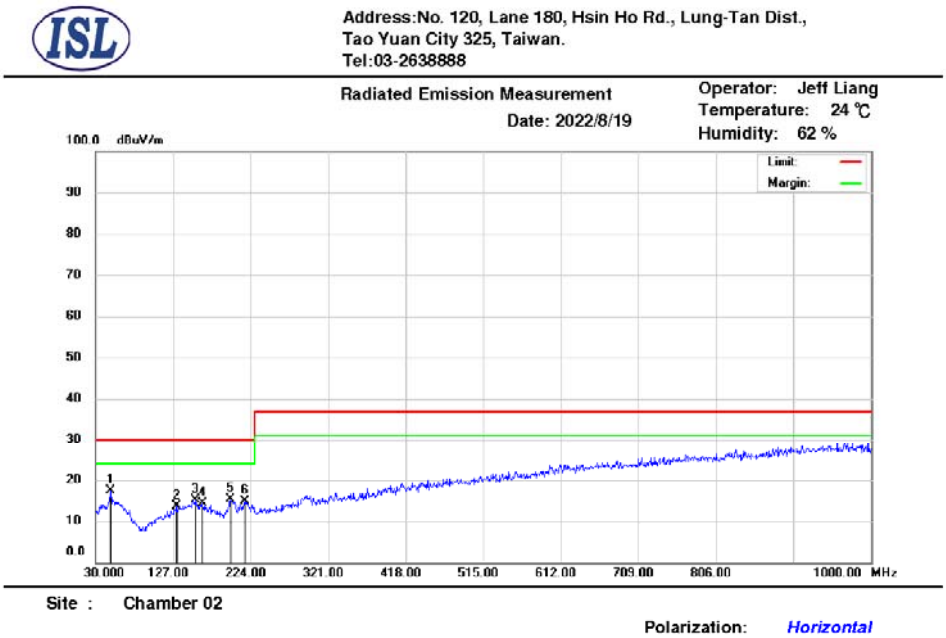

Mk.	Frequency (MHz)	RX_R (dBuV)	Correct Factor(dB/m)	Emission (dBuV/m)	Limit (dBuV/m)	Margin (dB)	Ant.Pos (cm)	Tab.Pos (deg.)	Detector
1	48.43	33.90	-16.59	17.31	30.00	-12.69	257	345	peak
2	130.88	30.88	-17.20	13.68	30.00	-16.32	100	67	peak
3	155.13	30.49	-15.26	15.23	30.00	-14.77	100	252	peak
4	163.86	29.88	-15.50	14.38	30.00	-15.62	331	58	peak
5	198.78	33.68	-18.35	15.33	30.00	-14.67	231	164	peak
6	217.21	32.97	-18.07	14.90	30.00	-15.10	100	262	peak

* Note:
Margin = Emission – Limit
Emission = Radiated Amplitude + Correct Factor
Correct Factor = Antenna Correction Factor + Cable Loss – Pre-Amplifier Gain
A margin of -8dB means that the emission is 8dB below the limit
Antenna Distance: 10 meters
If the peak measured value meets the QP limit, The QP value is inherently compliant.

- Radiated Emissions (Vertical)

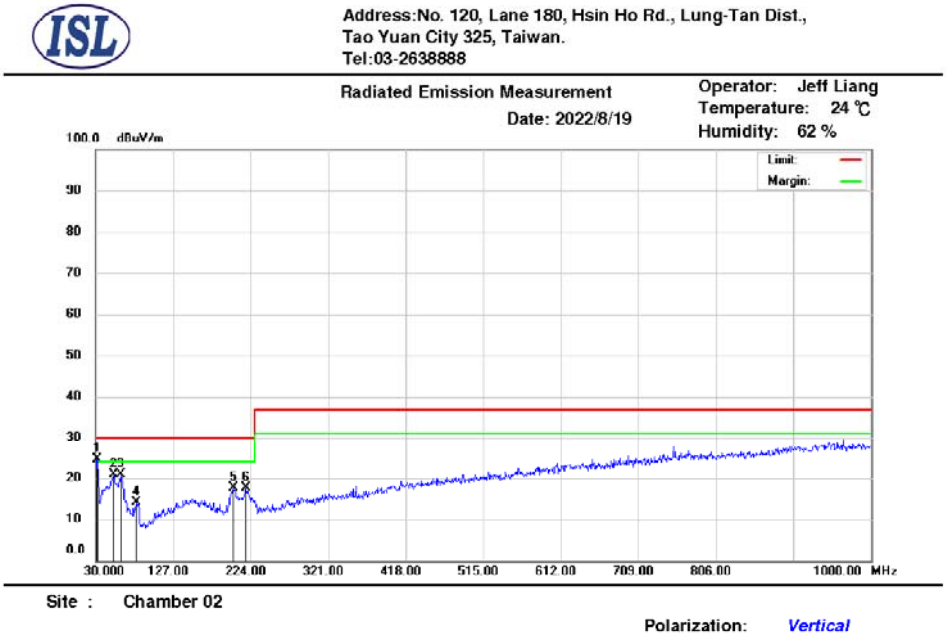

Mk.	Frequency (MHz)	RX_R (dBuV)	Correct Factor(dB/m)	Emission (dBuV/m)	Limit (dBuV/m)	Margin (dB)	Ant.Pos (cm)	Tab.Pos (deg.)	Detector
1	31.94	43.13	-18.56	24.57	30.00	-5.43	200	209	peak
2	52.31	37.52	-16.60	20.92	30.00	-9.08	200	330	peak
3	62.01	38.30	-17.32	20.98	30.00	-9.02	100	271	peak
4	81.41	35.64	-21.60	14.04	30.00	-15.96	106	290	peak
5	202.66	36.14	-18.46	17.68	30.00	-12.32	397	306	peak
6	218.18	35.72	-18.06	17.66	30.00	-12.34	343	93	peak

* Note:
Margin = Emission – Limit
Emission = Radiated Amplitude + Correct Factor
Correct Factor = Antenna Correction Factor + Cable Loss – Pre-Amplifier Gain
A margin of -8dB means that the emission is 8dB below the limit
Antenna Distance: 10 meters
If the peak measured value meets the QP limit, The QP value is inherently compliant.

4.5 Test Setup Photo

Front View (30MHz~1GHz)

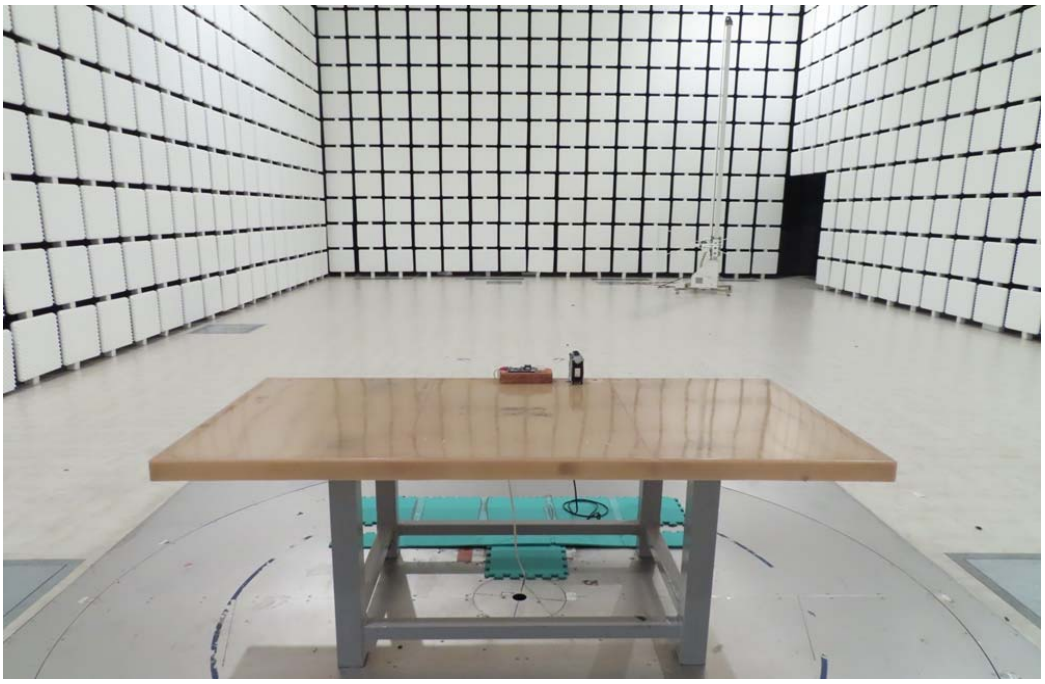

Back View (30MHz~1GHz)

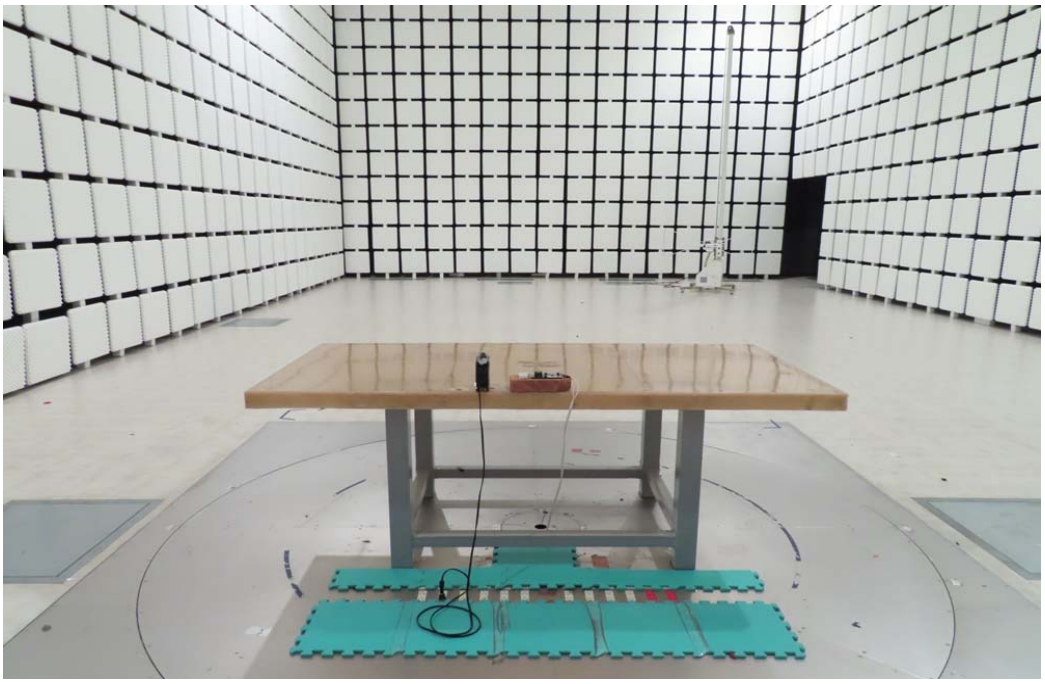

5. Voltage Disturbance Emissions at Antenna Terminals

5.1 Test Setup and Procedure

5.1.1 Test Setup

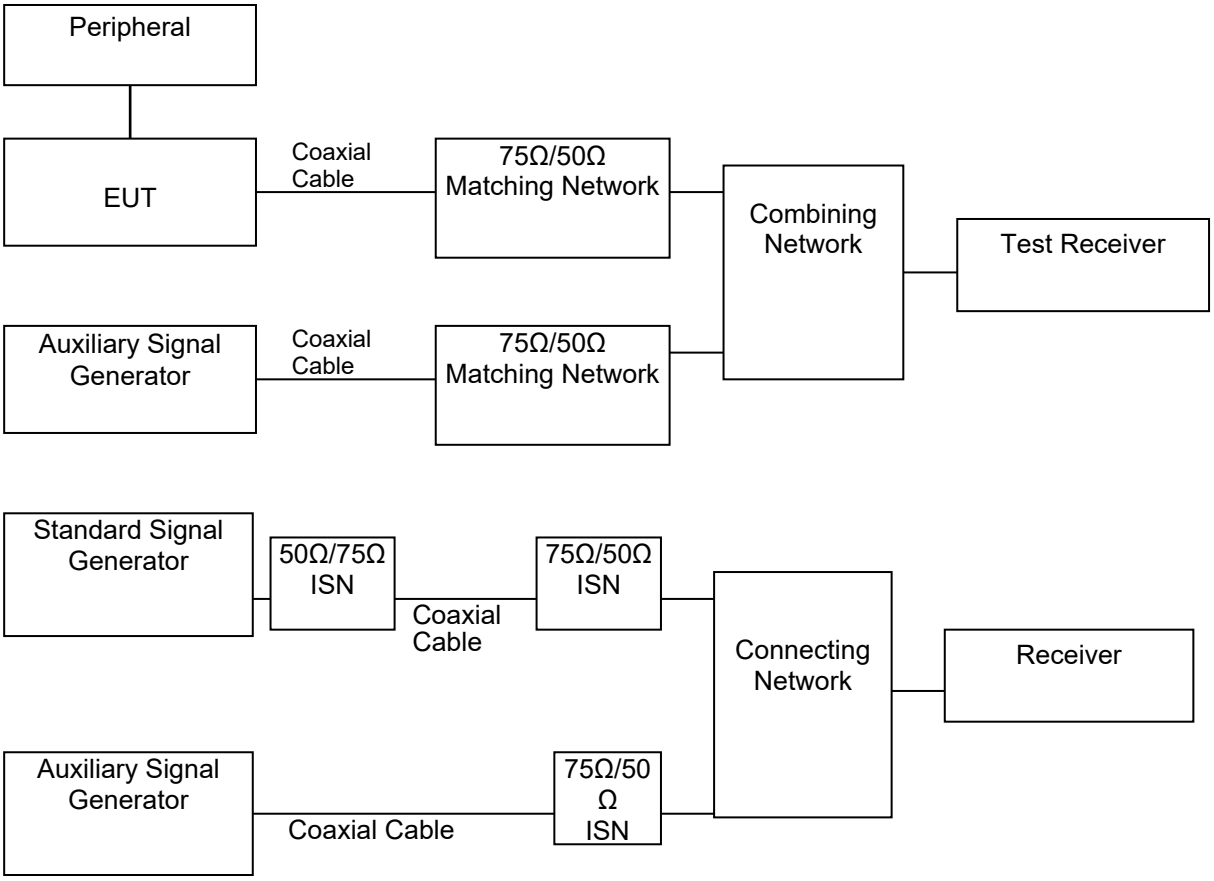

5.1.2 Test Procedure

The output level of the auxiliary signal generator was set to 70dBμV at the EUT antenna terminal with 75 ohms impedance with an un-modulated carrier.

The highest emissions were analyzed in details by operating the spectrum analyzer and/or EMI receiver in quasi-peak mode to determine the precise amplitude of the emissions. The power of EUT was switched off to make sure the emission was not contributed by the auxiliary signal generator. While doing so, the interconnecting cables and major parts of the system were moved around to maximize the emission.

5.1.3 EMI Receiver Configuration (for the frequencies tested)

Frequency Range:	30MHz-2150MHz
Detector Function:	Quasi-Peak Mode
Resolution Bandwidth:	120kHz

5.1.4 Limit

Applicable to:

1. TV broadcast receiver tuner ports with an accessible connector.
2. RF modulator output ports.
3. FM broadcast receiver tuner ports with an accessible connector.

Applicable to
1. TV broadcast receiver tuner ports (3.1.8) with an accessible connector
2. RF modulator output ports (3.1.29)
3. FM broadcast receiver tuner ports (3.1.8) with an accessible connector

Table clause	Frequency range MHz	Detector type/ bandwidth	Class B limits dB(μV) 75 Ω			Applicability
			Other	Local Oscillator Fundamental	Local Oscillator Harmonics	
A13.1	30 to 950	For frequencies ≤1 GHz Quasi Peak/ 120 kHz	46	46	46	See [a]
	950 to 2 150		46	54	54	
A13.2	950 to 2 150		46	54	54	See [b]
A13.3	30 to 300		46	54	50	See [c]
	300 to 1 000				52	
A13.4	30 to 300	For frequencies ≥1 GHz Peak/ 1 MHz	46	66	59	See [d]
	300 to 1 000				52	
A13.5	30 to 950		46	76	46	See [e]
	950 to 2 150			n/a	54	

[a] Television receivers (analogue or digital), video recorders and PC TV broadcast receiver tuner cards working in channels between 30 MHz and 1 GHz, and digital audio receivers.

[b] Tuner units (not the LNB) for satellite signal reception.

[c] Frequency modulation audio receivers and PC tuner cards.

[d] Frequency modulation car radios.

[e] Applicable to EUTs with RF modulator output ports (for example DVD equipment, video recorders, camcorders and decoders etc.) designed to connect to TV broadcast receiver tuner ports. Limits specified for the LO are for the RF modulator carrier signal and harmonics.

The term 'other' refers to all emissions other than the fundamental and the harmonics of the LO.

The measurement shall cover the entire frequency range.

The EUT shall be tuned in accordance with Table B.3 and clause C.4.2.1.

****Remarks: It is not necessary to be tested on this item.**

6. Differential Voltage Emissions

6.1 Test Setup and Procedure

6.1.1 Test Setup

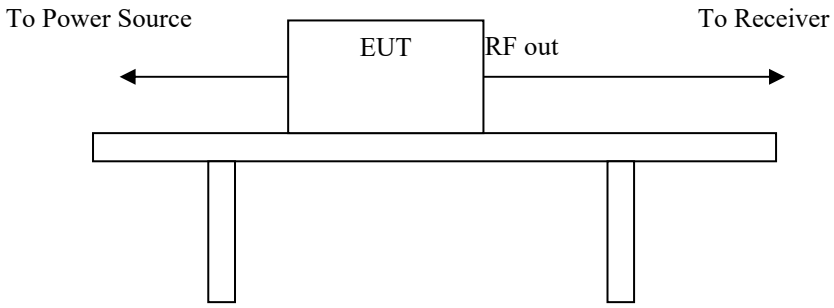

6.1.2 Test Procedure

The output level of the auxiliary signal generator was set to 70dBμV at the EUT antenna terminal with 75 ohms impedance with an un-modulated carrier.
The highest emissions were analyzed in details by operating the spectrum analyzer and/or EMI receiver in quasi-peak mode to determine the precise amplitude of the emissions. The power of EUT was switched off to make sure the emission was not contributed by the auxiliary signal generator. While doing so, the interconnecting cables and major parts of the system were moved around to maximize the emission.

6.1.3 EMI Receiver Configuration (for the frequencies tested)

Frequency Range:	30MHz-2150MHz
Detector Function:	Quasi-Peak Mode
Resolution Bandwidth:	120kHz

6.1.4 Limit

Applicable to:

1. TV broadcast receiver tuner ports with an accessible connector.
2. RF modulator output ports.
3. FM broadcast receiver tuner ports with an accessible connector.

Applicable to
1. TV broadcast receiver tuner ports (3.1.8) with an accessible connector
2. RF modulator output ports (3.1.29)
3. FM broadcast receiver tuner ports (3.1.8) with an accessible connector

Table clause	Frequency range MHz	Detector type/ bandwidth	Class B limits dB(μV) 75 Ω			Applicability
			Other	Local Oscillator Fundamental	Local Oscillator Harmonics	
A13.1	30 to 950	For frequencies ≤1 GHz Quasi Peak/ 120 kHz	46	46	46	See [a]
	950 to 2 150		46	54	54	
A13.2	950 to 2 150		46	54	54	See [b]
A13.3	30 to 300		46	54	50	See [c]
	300 to 1 000				52	
A13.4	30 to 300	For frequencies ≥1 GHz Peak/ 1 MHz	46	66	59	See [d]
	300 to 1 000				52	
A13.5	30 to 950		46	76	46	See [e]
	950 to 2 150			n/a	54	

[a] Television receivers (analogue or digital), video recorders and PC TV broadcast receiver tuner cards working in channels between 30 MHz and 1 GHz, and digital audio receivers.

[b] Tuner units (not the LNB) for satellite signal reception.

[c] Frequency modulation audio receivers and PC tuner cards.

[d] Frequency modulation car radios.

[e] Applicable to EUTs with RF modulator output ports (for example DVD equipment, video recorders, camcorders and decoders etc.) designed to connect to TV broadcast receiver tuner ports. Limits specified for the LO are for the RF modulator carrier signal and harmonics.

The term 'other' refers to all emissions other than the fundamental and the harmonics of the LO.

The measurement shall cover the entire frequency range.

The EUT shall be tuned in accordance with Table B.3 and clause C.4.2.1.

****Remarks: It is not necessary to be tested on this item.**

7. Outdoor units of home satellite receiving systems

7.1 Test Setup and Procedure

7.1.1 Test Setup

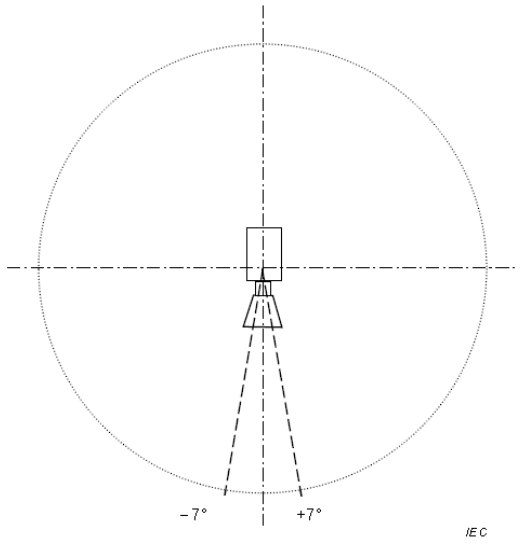	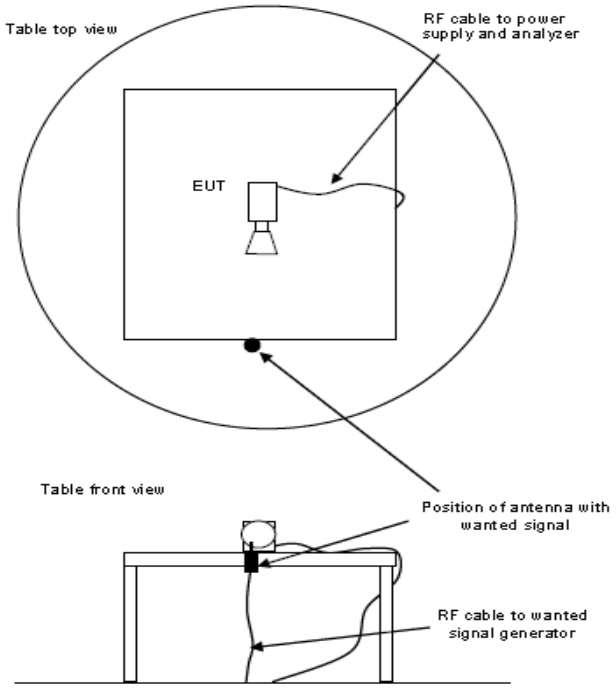
Description of ±7° of the main beam axis of the EUT	Measurement arrangements of transmit antenna for the wanted signal

7.1.2 Test Procedure

The input signal shall be adjusted to get the maximum rated output level from the EUT. For the measurement in the frequency range from 30 MHz to 18 GHz the input signal shall be adjusted so that the output frequency is within this frequency range. For the measurement in the frequency range above 1 GHz, the frequency of the input signal shall be adjusted in such a way that the EUT is measured, as a minimum, at the lowest, middle and highest rated output frequency within the measured frequency range.

7.1.3 Spectrum Analyzer Configuration (for the frequencies tested)

Frequency Range: 30MHz--1000MHz
Detector Function: Quasi-Peak Mode
Resolution Bandwidth: 120kHz

Frequency Range: Above 1000MHz
Detector Function: Peak/Average Mode
Resolution Bandwidth: 1MHz

7.1.4 Limit

EN 55032:2015+A11:2020

Table Clause	Frequency Range MHz	Measurement			Class B Limits	Applicable to
		Facility (see Table A.1)	Distance m	Detector type / Bandwidth		
A7.1	30 to 1 000	SAC / OATS / FAR	See Table A.4	Quasi Peak / 120 kHz	See Table A.4	
A7.2	1 000 to 2 500	FSOATS	3	Average / 1 MHz	50 dB(µV/m)	LO leakage and spurious radiated emissions from the EUT, in the region outside ±7° of the main beam axis. See Figure H.1
	2 500 to 18 000				64 dB(µV/m)	
A7.3	1 000 to 18 000	FSOATS	3	Average / 1 MHz	37 dB(µV/m)	LO leakage from the EUT, in the region within ±7° of the main beam axis. See Figure H.1
A7.4	1 000 to 18 000	Conducted (Clause H.4)	n/a	Average / 1 MHz	30 dBpW	

For details of the EUT configuration, see Annex H.

For radiated emissions measurements at frequencies up to 1 GHz, the requirements defined in Table A.4 shall be satisfied.

Apply the appropriate limits across the entire frequency range.

Apply the limits defined in table Clause A7.1 and A7.2. Also apply the limits defined in either table Clause A7.3 or A7.4.

EN 55032:2015+A1:2020

Table Clause	Frequency Range MHz	Measurement			Class B Limits	Notes
		Facility (see Table A.1)	Distance m	Detector type / Bandwidth		
A7.1	30 to 1 000	SAC / OATS / FAR	See Table A.4	Quasi Peak / 120 kHz	See Table A.4	See Annex H
A7.2	1 000 to 2 500	FSOATS	3	Average / 1 MHz	50 dB(µV/m)	LO leakage and spurious radiated emissions from the EUT, in the region outside ±7° azimuth of the main beam axis. See Annex H
	2 500 to 18 000				64 dB(µV/m)	
A7.3	1 000 to 18 000	FSOATS	3	Average / 1 MHz	70 dB(µV/m)	LO leakage from the EUT, in the region within ±7° azimuth of the main beam axis. See Annex H
A7.4	1 000 to 18 000	Conducted (Clause H.4)	n/a	Average / 1 MHz	63 dBpW	

Apply the limits defined in table Clause A7.1 and A7.2. Also apply the limits defined in either table Clause A7.3 or A7.4.

For details of the EUT configuration, see Annex H.

For radiated emissions measurements at frequencies up to 1 GHz, the requirements defined in Table A.4 shall be satisfied.

Apply the appropriate limits across the entire frequency range.

Note 1: The test limit in this report is based on EN 55032:2015+A11:2020.

Note 2: Test data in this report has been taken against the EN 55032:2015+A11:2020 limit as it is the most stringent limit. By complying with the more restrictive EN 55032:2015+A11:2020 limit compliance with the EN 55032:2015+A1:2020 limit is also demonstrated.

****Remarks: It is not necessary to be tested on this item.**

8. Electrostatic discharge (ESD) immunity

8.1 Test Specification and Setup

8.1.1 Test Specification

Port:	Enclosure
Basic Standard:	EN 61000-4-2 / IEC 61000-4-2 / BS EN 61000-4-2 (details referred to Sec 1.2)
Test Level:	Air +/- 2 kV, +/- 4 kV, +/- 8 kV Contact +/- 4 kV, +/- 6 kV
Criteria:	B
Test Procedure:	refer to ISL QA -T4-E-S7

Selected Test Point

Air: discharges were applied to slots, aperture or insulating surfaces. 10 single air discharges were applied to each selected points.

Contact: 10 discharges minimum were to the selected contact points.

Indirect Contact Points: 10 discharges were applied to center of one edge of VCP and each EUT side of HCP with 10 cm away from EUT.

8.1.2 Test Setup

EUT is 1m from the wall and other metallic structure. When Battery test mode is needed, a cable with one 470kΩ resister at two rare ends is connected from metallic part of EUT and screwed to HCP.

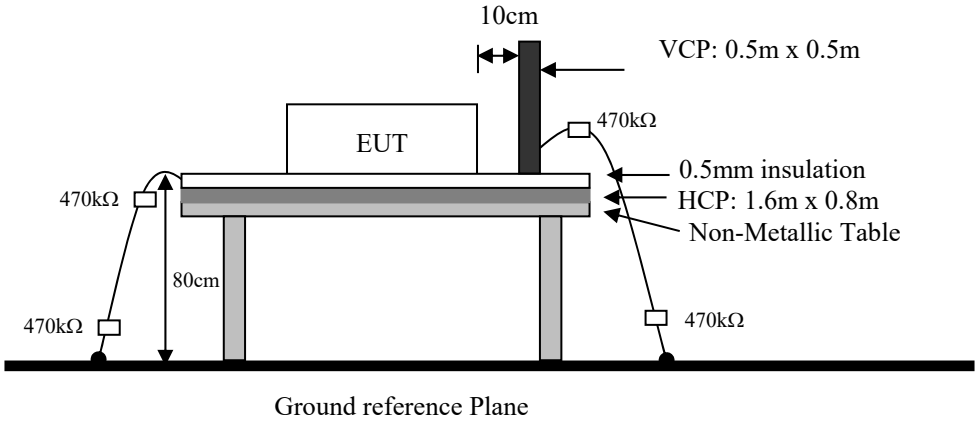

8.1.3 Test Result

Performance of EUT complies with the given specification.

8.2 Test Data: Configuration 1

Basic Standard	EN 61000-4-2	Date
EUT Model Name	THN 20-7223UIR-N	2022-08-26
		Engineer
Barometer Pressure	100.3kPa	Chihhao Yang
Temperature	22℃	Equipment & Test Site
Humidity	40%	EM TEST(Model: Dito)
Voltage/Freq.	72 Vdc	ESD 1F

A=criteria A, B=criteria B, C=criteria C

→ Blue arrow represent Air discharge point
→ Red arrow represent Contact discharge point
ND=No Discharge, No Arcing; Meets criteria but unable to obtain an electrostatic discharge (ESD) at this test point.
X=EUT DOES NOT meet the acceptance criteria
A=criteria A, B=criteria B, C=criteria C

Contact Discharge	Voltage kV 25 Discharge @ 1 PPS										
Test Location	+4	-4	+6	-6							Comments
1	A	A	A	A							
2	A	A	A	A							
3	A	A	A	A							
4	A	A	A	A							
5	A	A	A	A							
Air Discharge	Voltage kV 10 Discharge @ 1 PPS										
Test Location	+2	-2	+4	-4	+8	-8					Comments
1	A	A	A	A	A	A					
2	A	A	A	A	A	A					
3	A	A	A	A	A	A					
4	A	A	A	A	A	A					
5	A	A	A	A	A	A					
Indirect Discharge	Voltage kV 25 Discharge @ 1 PPS										
Test Location	+4	-4	+6	-6							Comments
VCP Front	A	A	A	A							
VCP Right	A	A	A	A							
VCP Left	A	A	A	A							
VCP Back	A	A	A	A							
Test Location	+4	-4	+6	-6							Comments
HCP Front	A	A	A	A							
HCP Right	A	A	A	A							
HCP Left	A	A	A	A							
HCP Back	A	A	A	A							

Additional Notes: A=criteria A, B=criteria B, C=criteria C

8.3 Test Point

Red arrow lines indicate the contact points, and blue arrow lines indicate the air points.

Figure 1 : Test Point Assignments Discharge:

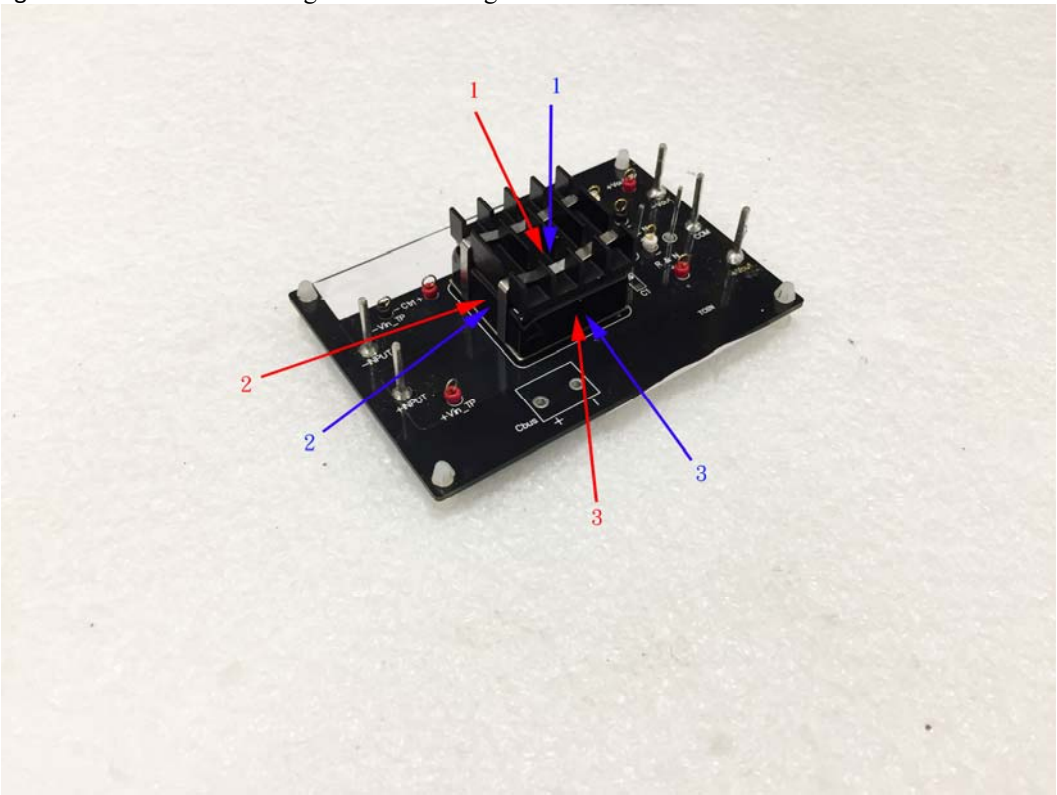

Figure 2 : Test Point Assignments Discharge:

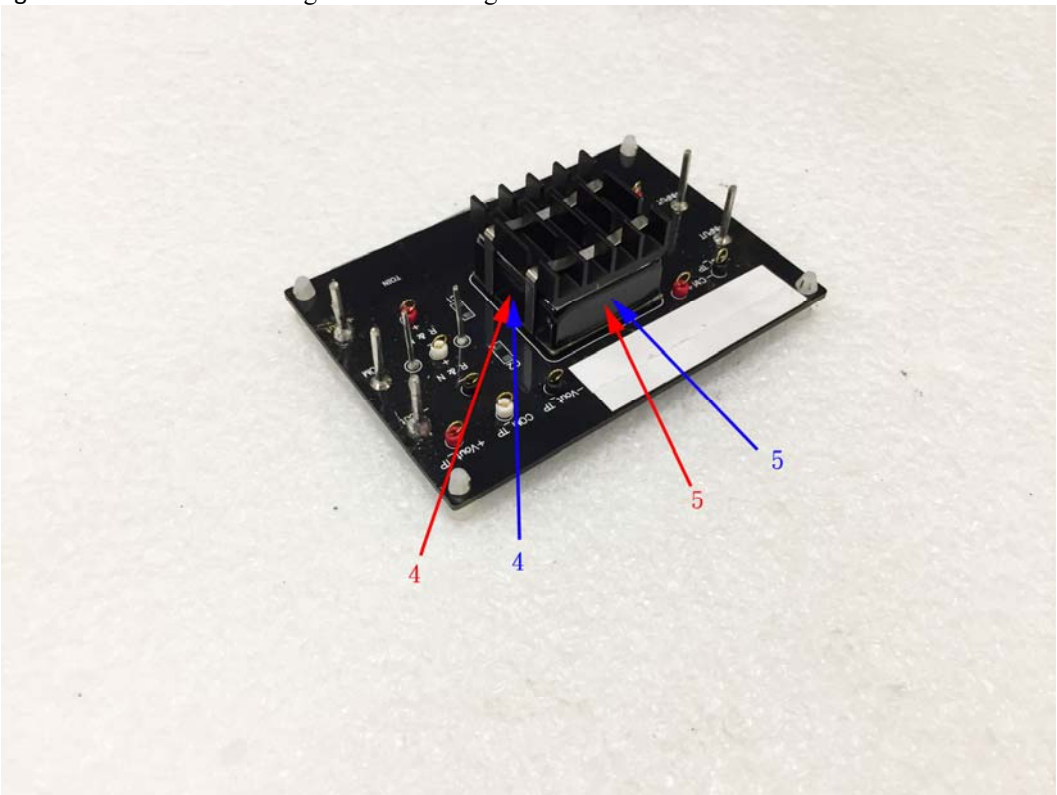

8.4 Test Setup Photo

9. Radio-Frequency, Electromagnetic Field immunity

9.1 Test Specification and Setup

9.1.1 Test Specification

Port:	Enclosure
Basic Standard:	EN 61000-4-3 / IEC 61000-4-3 / BS EN 61000-4-3 (details referred to Sec 1.2)
Test Level: (By manufacture reference)	20 V/m 10 V/m, 10 V/m, 10 V/m, 10 V/m
Modulation:	AM 1kHz 80%
Frequency range:	80 MHz~1 GHz 1800MHz, 2600MHz, 3500MHz, 5000MHz
Frequency Step:	1% of last step frequency
Dwell time:	2s
Polarization:	Vertical and Horizontal
EUT Azimuth Angle	☒0° ☒90° ☒180° ☒270°
Criteria:	A
Test Procedure:	refer to ISL QA -T4-E-S8

9.1.2 Test Setup

The field sensor is placed at one calibration grid point to check the intensity of the established fields on both polarizations. EUT is adjusted to have each side of EUT face coincident with the calibration plane. A CCD camera and speakers are used to monitor the condition of EUT for the performance judgment.

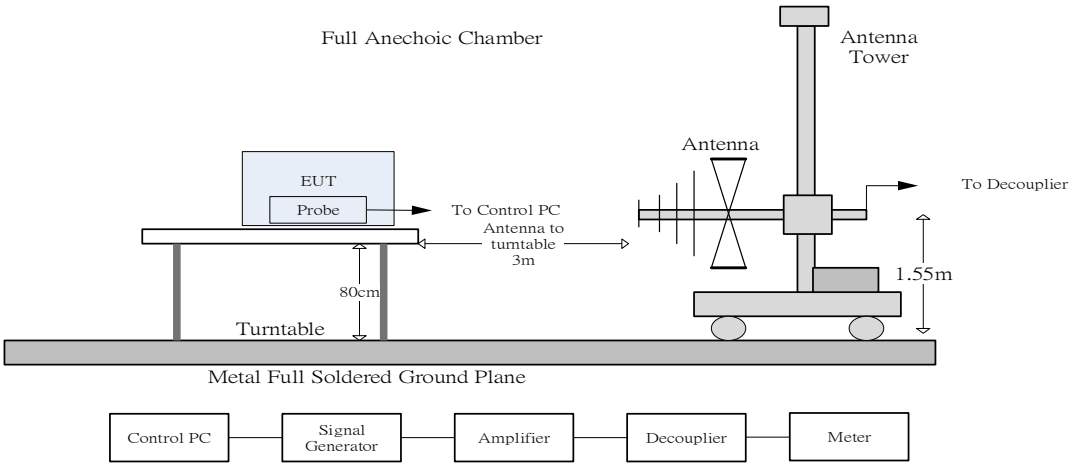

9.1.3 Test Result

Performance of EUT complies with the given specification.

9.2 Test Data: Configuration 1

Basic Standard	EN 61000-4-3	Date	
EUT Model Name	THN 20-7223UIR-N	2022-12-22	
		Engineer	
Barometer Pressure	102.2kPa	SAWYER	
Temperature	23℃	Equipment & Test Site	
Humidity	55%	Chamber 15	
Voltage/Freq.	72 Vdc		

A=criteria A, B=criteria B, C=criteria C

EUT Angle	Frequency		Dwell time	Modulation	Level (V/m)	Antenna Polarization	EUT Status	Comments
	Range (MHz)	Steps %						
0°(front)	80-1000	1	2s	80% @ 1kHz	20	Vertical	A	
90°(left)	80-1000	1	2s	80% @ 1kHz	20	Vertical	A	
180°(back)	80-1000	1	2s	80% @ 1kHz	20	Vertical	A	
270°(right)	80-1000	1	2s	80% @ 1kHz	20	Vertical	A	
0°(front)	80-1000	1	2s	80% @ 1kHz	20	Horizontal	A	
90°(left)	80-1000	1	2s	80% @ 1kHz	20	Horizontal	A	
180°(back)	80-1000	1	2s	80% @ 1kHz	20	Horizontal	A	
270°(right)	80-1000	1	2s	80% @ 1kHz	20	Horizontal	A	
0°(front)	1800	1	2s	80% @ 1kHz	10	Vertical	A	
90°(left)	1800	1	2s	80% @ 1kHz	10	Vertical	A	
180°(back)	1800	1	2s	80% @ 1kHz	10	Vertical	A	
270°(right)	1800	1	2s	80% @ 1kHz	10	Vertical	A	
0°(front)	1800	1	2s	80% @ 1kHz	10	Horizontal	A	
90°(left)	1800	1	2s	80% @ 1kHz	10	Horizontal	A	
180°(back)	1800	1	2s	80% @ 1kHz	10	Horizontal	A	
270°(right)	1800	1	2s	80% @ 1kHz	10	Horizontal	A	
0°(front)	2600	1	2s	80% @ 1kHz	10	Vertical	A	
90°(left)	2600	1	2s	80% @ 1kHz	10	Vertical	A	
180°(back)	2600	1	2s	80% @ 1kHz	10	Vertical	A	
270°(right)	2600	1	2s	80% @ 1kHz	10	Vertical	A	

EUT Angle	Frequency		Dwell time	Modulation	Level (V/m)	Antenna Polarization	EUT Status	Comments
	Range (MHz)	Steps %						
0°(front)	2600	1	2s	80% @ 1kHz	10	Horizontal	A	
90°(left)	2600	1	2s	80% @ 1kHz	10	Horizontal	A	
180°(back)	2600	1	2s	80% @ 1kHz	10	Horizontal	A	
270°(right)	2600	1	2s	80% @ 1kHz	10	Horizontal	A	
0°(front)	3500	1	2s	80% @ 1kHz	10	Vertical	A	
90°(left)	3500	1	2s	80% @ 1kHz	10	Vertical	A	
180°(back)	3500	1	2s	80% @ 1kHz	10	Vertical	A	
270°(right)	3500	1	2s	80% @ 1kHz	10	Vertical	A	
0°(front)	3500	1	2s	80% @ 1kHz	10	Horizontal	A	
90°(left)	3500	1	2s	80% @ 1kHz	10	Horizontal	A	
180°(back)	3500	1	2s	80% @ 1kHz	10	Horizontal	A	
270°(right)	3500	1	2s	80% @ 1kHz	10	Horizontal	A	
0°(front)	5000	1	2s	80% @ 1kHz	10	Vertical	A	
90°(left)	5000	1	2s	80% @ 1kHz	10	Vertical	A	
180°(back)	5000	1	2s	80% @ 1kHz	10	Vertical	A	
270°(right)	5000	1	2s	80% @ 1kHz	10	Vertical	A	
0°(front)	5000	1	2s	80% @ 1kHz	10	Horizontal	A	
90°(left)	5000	1	2s	80% @ 1kHz	10	Horizontal	A	
180°(back)	5000	1	2s	80% @ 1kHz	10	Horizontal	A	
270°(right)	5000	1	2s	80% @ 1kHz	10	Horizontal	A	
Additional Notes: A=criteria A, B=criteria B, C=criteria C								

9.3 Test Setup Photo

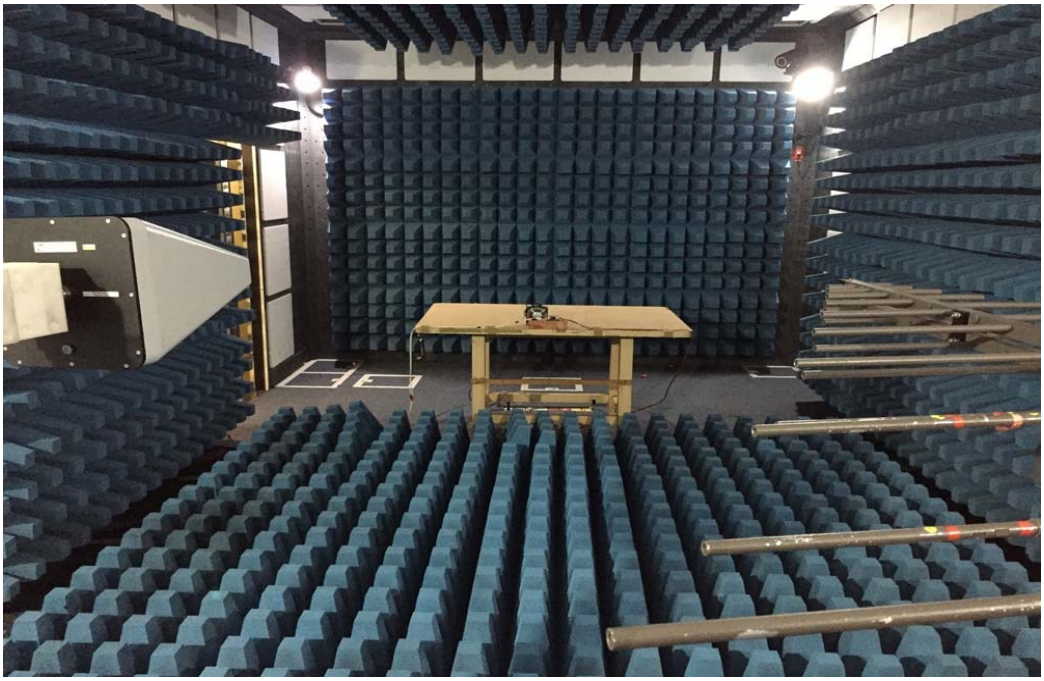

10. Electrical Fast transients/burst immunity

10.1 Test Specification and Setup

10.1.1 Test Specification

Port:	DC mains
Basic Standard:	EN 61000-4-4 / IEC 61000-4-4 / BS EN 61000-4-4 (details referred to Sec 1.2)
Test Level: (By manufacture reference)	DC Power Port: +/- 2 kV
Rise Time:	5ns
Hold Time:	50ns
Burst Period:	300ms
Repetition Frequency:	5kHz
Criteria:	B
Test Procedure:	refer to ISL QA -T4-E-S9

Test Procedure

The EUT was setup on a nonconductive table 0.1 m above a reference ground plane.

Test Points	Polarity	Result	Comment
Line	+	N	60 sec
	-	N	60 sec
Neutral	+	N	60 sec
	-	N	60 sec
Line and Neutral	+	N	60 sec
	-	N	60 sec

Note: 'N' means normal, the EUT function is correct during the test.

10.1.2 Test Setup

EUT is at least 50cm from the conductive structure.

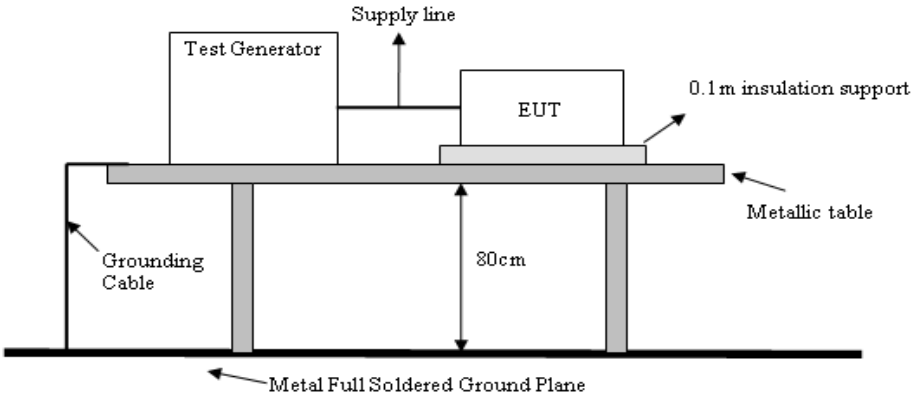

10.1.3 Test Result

Performance of EUT complies with the given specification.

10.2 Test Data: Configuration 1

Basic Standard	EN 61000-4-4	Date	
EUT Model Name	THN 20-7223UIR-N	2022-12-22	
		Engineer	
Barometer Pressure	102.2kPa	SAWYER	
Temperature	24°C	Equipment & Test Site	
Humidity	52%	EMC-PARTNER (Model: IMU3000)	
Voltage/Freq.	72 Vdc		
A=criteria A, B=criteria B, C=criteria C			
AC Power Port: ☐	DC Power Port: ☑	LAN Port: ☐	Telephone Port: ☐

DC Power Port

Line Under Test	Voltage Level	Severity Level	Pulse Polarity	Burst Repetition Rate	Test Duration	EUT Status	Comments
Line	2.0kV	3	+	300ms / 5.0kHz	1 Minutes	A	
Line	2.0kV	3	-	300ms / 5.0kHz	1 Minutes	A	
Neutral	2.0kV	3	+	300ms / 5.0kHz	1 Minutes	A	
Neutral	2.0kV	3	-	300ms / 5.0kHz	1 Minutes	A	
Line- Neutral	2.0kV	3	+	300ms / 5.0kHz	1 Minutes	A	
Line- Neutral	2.0kV	3	-	300ms / 5.0kHz	1 Minutes	A	

Additional Notes: A=criteria A, B=criteria B, C=criteria C

NOTE:
For the countermeasure components, please refer to Solution:" For Electrical Fast transient & Surge Immunity test requirements"

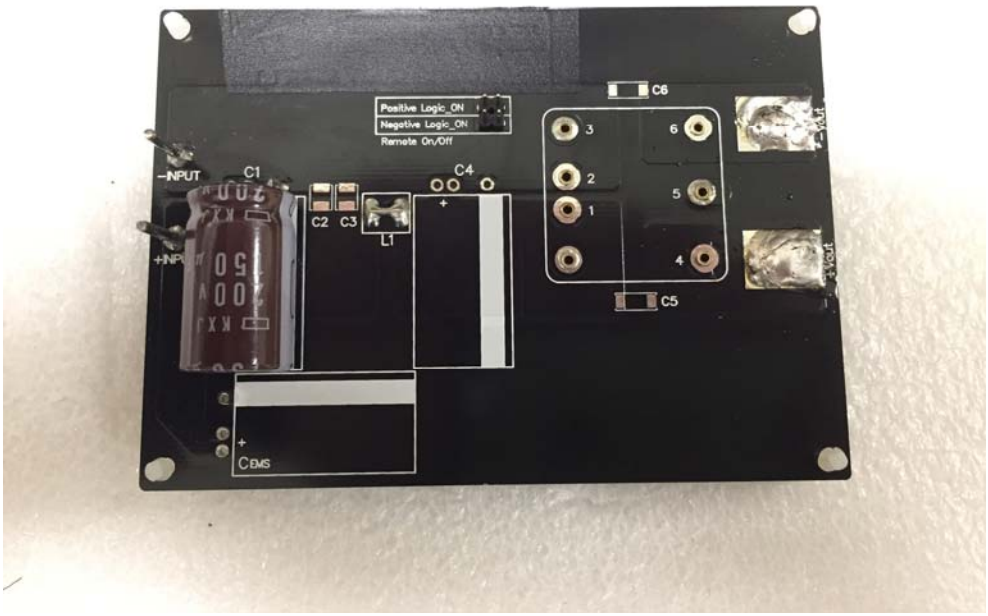

10.3 Test Setup Photo

11. Surge Immunity

11.1 Test Specification and Setup

11.1.1 Test Specification

Port:	DC mains
Basic Standard:	EN 61000-4-5 / IEC 61000-4-5 / BS EN 61000-4-5 (details referred to Sec 1.2)
Test Level: (By manufacture reference)	Line to Line: +/- 0.5 kV, +/- 1 kV, +/- 2 kV
Rise Time:	1.2us
Hold Time:	50us
Repetition Rate:	60 seconds
Angle:	☐0° ☐90° ☐180° ☐270°
Criteria:	B
Test Procedure:	refer to ISL QA -T4-E-S10

11.1.2 Test Setup

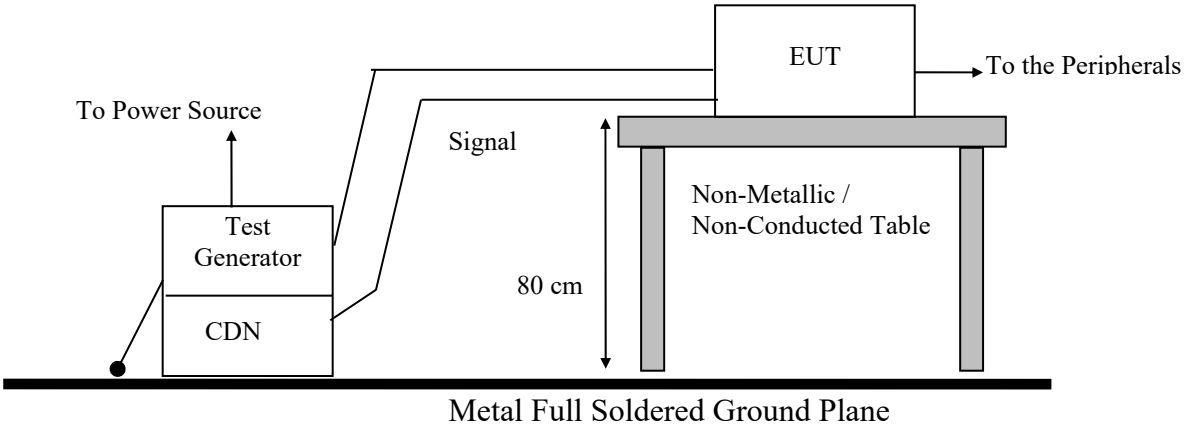

11.1.3 Test Result

Performance of EUT complies with the given specification.

11.2 Test Data: Configuration 1

Basic Standard	EN 61000-4-5	Date	
EUT Model Name	THN 20-7223UIR-N	2022-12-22	
		Engineer	
Barometer Pressure	102.2kPa	SAWYER	
Temperature	24℃	Equipment & Test Site	
Humidity	52%	EMC-PARTNER (Model: IMU3000)	
Voltage/Freq.	72 Vdc		
A=criteria A, B=criteria B, C=criteria C			
AC Power Port: ☐	DC Power Port: ☑	LAN Port: ☐	Telephone Port: ☐

DC Power Port

Line Under Test	Voltage	Level	Polarity	Repetition Rate	Cycle	Pulse Position	EUT Status	Comments
Line-Neutral	0.5kV	1	+	60 sec	5		A	
Line-Neutral	0.5kV	1	−	60 sec	5		A	
Line- Neutral	1.0kV	2	+	60 sec	5		A	
Line- Neutral	1.0kV	2	−	60 sec	5		A	
Line- Neutral	2.0kV	2	+	60 sec	5		A	
Line- Neutral	2.0kV	2	−	60 sec	5		A	

Additional Notes: A=criteria A, B=criteria B, C=criteria C

NOTE:
For the countermeasure components, please refer to Solution:" For Electrical Fast transient & Surge Immunity test requirements"

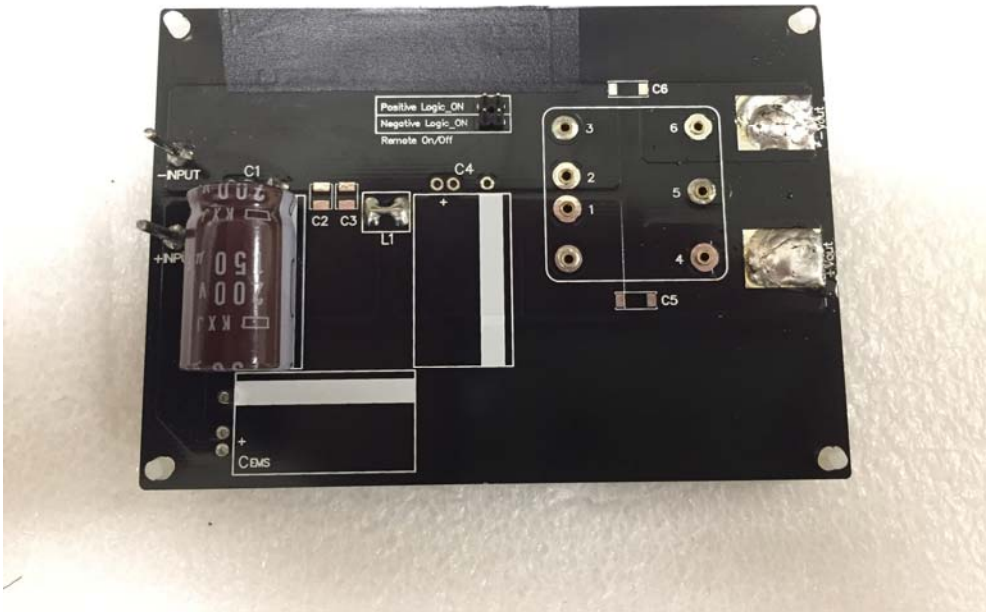

11.3 Test Setup Photo

12. Immunity to Conductive Disturbance

12.1 Test Specification and Setup

12.1.1 Test Specification

Port:	DC mains
Basic Standard:	EN 61000-4-6 / IEC 61000-4-6 / BS EN 61000-4-6 (details referred to Sec 1.2)
Test Level: (By manufacture reference)	0.15MHz to 80MHz: 10 Vrms
Modulation:	AM 1kHz 80%
Frequency Step:	1% of last Frequency
Dwell time:	2s
Criteria:	A
CDN Type:	CDN M2+M3
Test Procedure:	refer to ISL QA -T4-E-S11

12.1.2 Test Setup

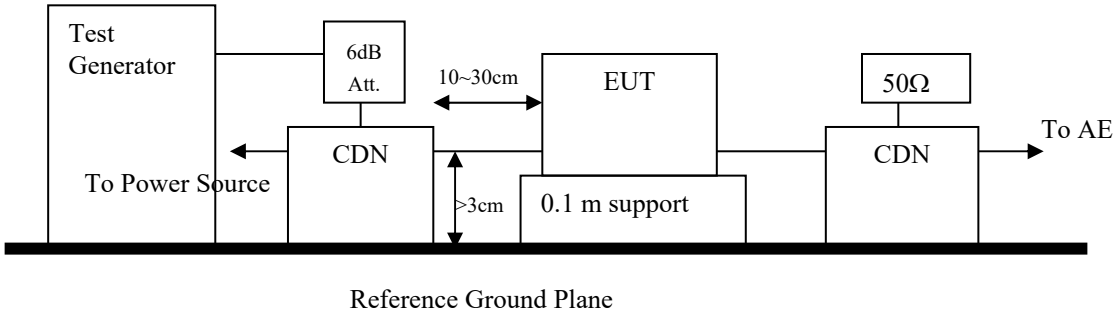

12.1.3 Test Result

Performance of EUT complies with the given specification.

12.2 Test Data: Configuration 1

Basic Standard	EN 61000-4-6				Date		
EUT Model Name	THN 20-7223UIR-N				2022-12-22		
					Engineer		
Barometer Pressure	102.2kPa				SAWYER		
Temperature	24℃				Equipment & Test Site		
Humidity	57%				FRANKONIA (Model: CIT-10/75)		
Voltage/Freq.	72 Vdc						
A=criteria A, B=criteria B, C=criteria C							
DC Power Port							
Line Under Test	Frequency		Level	Modulation	Dwell time	EUT Status	Comments
	Range (MHz)	Steps %					
DC Power Port	0.15 to 80	1	10V	80% @ 1kHz	2s	A	
Additional Notes: A=criteria A, B=criteria B, C=criteria C							

12.3 Test Setup Photo

13. Power Frequency Magnetic Field immunity

13.1 Test Specification and Setup

13.1.1 Test Specification

Port:	Enclosure
Basic Standard:	EN 61000-4-8 / IEC 61000-4-8 / BS EN 61000-4-8 (details referred to Sec 1.2)
Test Level: (By manufacture reference)	100 A/m, 1000 A/m
Polarization:	X, Y, Z
Criteria:	A
Test Procedure:	refer to ISL QA -T4-E-S12

13.1.2 Test Setup

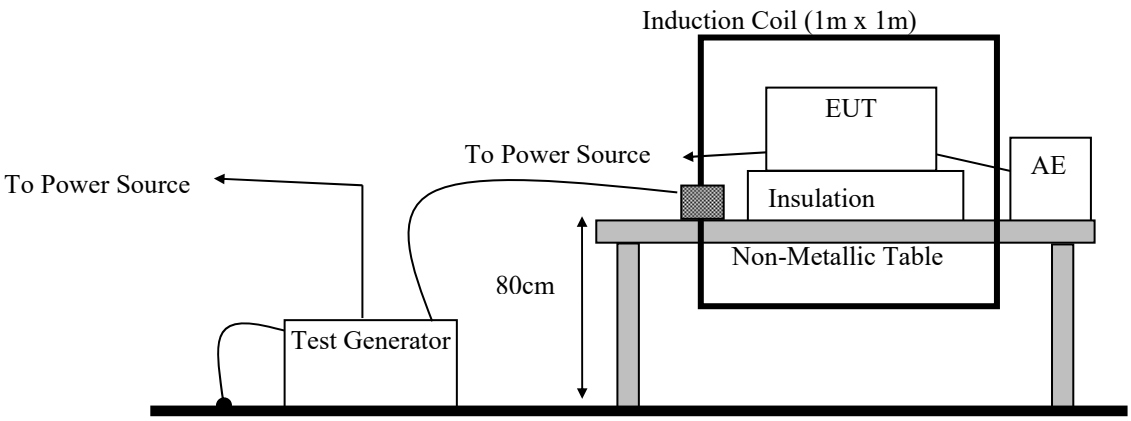

13.1.3 Test Result

Performance of EUT complies with the given specification.

13.2 Test Data: Configuration 1

Basic Standard	EN 61000-4-8			Date	
EUT Model Name	THN 20-7223UIR-N			2022-12-22	
				Engineer	
Barometer Pressure	102.2kPa			SAWYER	
Temperature	24℃			Equipment & Test Site	
Humidity	55%			Magnetic Field Immunity Loop Brand: Pic Model:PMF1000 & Magnetic Field Test AC Power Source Brand: Pic Model: AC Power Source	
Voltage/Freq.	72Vdc				
A=criteria A, B=criteria B, C=criteria C					
Antenna Polarization	Frequency (Hz)	Test Level	Test Duration	EUT Status	Comment
X	0	100 A/m	1 Minutes	A	
Y	0	100 A/m	1 Minutes	A	
Z	0	100 A/m	1 Minutes	A	
X	0	1000 A/m	1 Second	A	
Y	0	1000 A/m	1 Second	A	
Z	0	1000 A/m	1 Second	A	
Additional Notes: A=criteria A, B=criteria B, C=criteria C					

13.3 Test Setup Photo

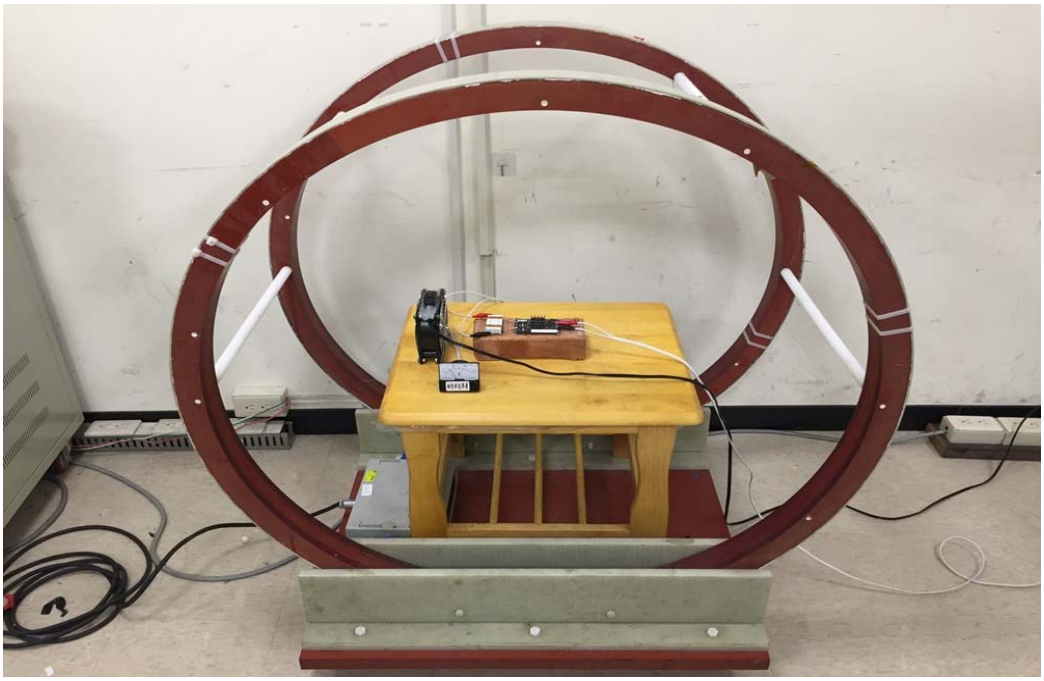

14. Appendix

14.1 Appendix A: Test Equipment

14.1.1 Test Equipment List

Location	Equipment Name	Brand	Model	S/N	Last Cal. Date	Next Cal. Date
Conduction 03	EMI Receiver 15	ROHDE & SCHWARZ	ESCI	101166	07/05/2022	07/05/2023
Conduction 03	Chamber05 -1 Cable	WOKEN	CFD 300-NL	Chamber05 -1 Cable	08/30/2021	08/30/2022
Conduction 03	LISN 19	R&S	ENV216	101425	11/11/2021	11/11/2022
Conduction 03	LISN 25	SCHWARZBECK	NNLK 8121	8121-807	07/22/2022	07/22/2023

Location Chamber02	Equipment Name	Brand	Model	S/N	Last Cal. Date	Next Cal. Date
Radiation	BILOG Antenna 17 (30MHz~1GHz)	SCHWARZBECK	VULB 9168+EMCI-N-6-05	645	05/18/2022	05/18/2023
Radiation	Preamplifier 25	EMCI	EMC9135	980295	03/31/2022	03/31/2023
Radiation	Coaxial Cable Chmb 02-10M-02	EMC	RG214U	Chmb 02-10M-02	10/13/2021	10/13/2022
Radiation	EMI Receiver 13	ROHDE & SCHWARZ	ESCI	101015	06/07/2022	06/07/2023

Location	Equipment Name	Brand	Model	S/N	Last Cal. Date	Next Cal. Date
EN61K-4-2	ESD Gun 14	EM TEST	Dito	P2223264472	07/07/2022	07/07/2023
EN61K-4-3	Broadband Log-Periodic Antenna	AR	AT1080	310698	N/A	N/A
EN61K-4-3	Horn Antenna RF-01	AR	ATS700M11G	0335864	N/A	N/A
EN61K-4-3	Amplifier 80Mz~1GHz 250W	AR	250W1000C	358877	N/A	N/A
EN61K-4-3	Amplifier 800MHz~4.2GHz 50W	AR	50S1G4M1	312762	N/A	N/A
EN61K-4-3	Amplifier 4.0~8.0GHz 35W	AR	35S4G8AM1	0335752	N/A	N/A
EN61K-4-3	Broadband Coupler 80M~1GHz	Amplifier Research	DC6180A	0341805	N/A	N/A
EN61K-4-3	Coaxial Cable	INSULATED	NPS-4806-2360-NP3	108599.003.01.03	N/A	N/A
EN61K-4-3	Broadband Coupler 0.8G~4.26GHz	AR	DC7144A	0335226	N/A	N/A
EN61K-4-3	Broadband Coupler 4G~8GHz	AR	DC7350A	0335817	N/A	N/A
EN61K-4-3	Signal Generator 08	ROHDE & SCHWARZ	SMB100A	106541	05/06/2022	05/06/2023
EN61K-4-4 EN61K-4-5	Signal Generator 10	EMC Partner	IMU3000	1547	09/14/2022	09/14/2023
EN61K-4-6	CDN M2+M3 04	TESEQ	CDN M016	43257	08/30/2022	08/30/2023
EN61K-4-6	Coaxial Cable 4-6 02-1			4-6 02-1	N/A	N/A
EN61K-4-6	Conducted Immunity Test System 03	Frankonia	CIT-10-75	126B1151	01/14/2022	01/14/2023
EN61K-4-8	Magnetic Field Test Generator 02	PIC	PMF-1000	ANT150701	05/30/2022	05/30/2023

PS: N/A => The equipment does not need calibration.

****Software for Controlling Spectrum/Receiver and Calculating Test Data**

Test Item	Filename	Version
EN 61000-4-2	N/A	2.0
EN 61000-4-3	i2	529b
EN 61000-4-4	TEM A3000	v4.6.1
EN 61000-4-5	TEM A3000	v4.6.1
EN 61000-4-6	i2	529b
EN 61000-4-8	N/A	

Site	Filename	Version
Conduction/Radiation	EZ EMC	ISL-03A2

14.2 Appendix B: Uncertainty of Measurement

The laboratory measurement uncertainty accordance with refers to CISPR 16-4-2. If Ulab is less than or equal to Ucispr in Table 1, then the test report may either state the value of Ulab or state that Ulab is less than Ucispr.
The coverage factor k = 2 yields approximately a 95 % level of confidence.

<Conduction 03>
AMN: ± 2.90dB

<Chamber 02 (10m)>
Horizontal
30MHz~200MHz: ±4.42dB
200MHz~1000MHz: ±3.83dB
Vertical
30MHz~200MHz: ±4.57dB
200MHz~1000MHz: ±3.97dB

<Immunity 02>

Test item	Uncertainty	Test item	Uncertainty
EN 61000-4-2 (ESD)		EN 61000-4-6 (CS)	
Rise time tr	≦ 9.81%	CDN	1.73 dB
Peak current Ip	≦ 4.83%	EM Clamp	3.37 dB
current at 30 ns	≦ 4.84%	EN 61000-4-8 (Magnetic)	5.49 %
current at 60 ns	≦ 4.84%		
EN 61000-4-3 (RS)	2.66 dB		
EN 61000-4-4 (EFT)			
voltage rise time (tr)	5.4 %		
peak voltage value (VP)	6.34 %		
voltage pulse width (t_w)	3.5 %		
EN 61000-4-5 (Surge)			
open-circuit voltage front time	10.5 %		
open-circuit voltage peak value	7.5 %		
open-circuit voltage duration (T_d)	53.33 µs		

14.3 Appendix C: Photographs of EUT

Please refer to the File of **ISL-22LE0999P**

--- END ---